PUD NO. 1 OF SNOHOMISH COUNTY
BURN ROAD RESERVOIR
WE #965 WO #100099341

NE 1/4 SEC. 32, TWP 31 N., RNG. 06 E., W.M.
CITY OF ARLINGTON, SNOHOMISH COUNTY, WASHINGTON

MAY 2025

INDEX OF DRAWINGS

SHEET NO.	DWG NO.	DRAWING TITLE
GENERAL		
1	G-1	COVER, PROJECT LOCATION MAPS, AND INDEX OF DRAWINGS
2	G-2	GENERAL AND SURVEY NOTES
3	G-3	LEGEND, ABBREVIATIONS, AND DESIGNATIONS
EROSION CONTROL		
4	EC-1	EXISTING CONDITIONS AND TESC PLAN 1 OF 2
5	EC-2	EXISTING CONDITIONS AND TESC PLAN 2 OF 2
6	EC-3	TESC NOTES AND DETAILS
CIVIL		
7	C-1	OVERALL SITE AND CIVIL KEY PLAN
8	C-2	RESERVOIR SITE WATER PLAN
9	C-3	WATER PLANS
10	C-4	RESERVOIR SITE DRAINAGE PLAN
11	C-5	RESERVOIR GRADING AND PAVING PLAN
12	C-6	CIVIL DETAILS 1 OF 2
13	C-7	CIVIL DETAILS 2 OF 2
RESERVOIR		
14	R-1	RESERVOIR FLOOR AND ROOF PLANS
15	R-2	RESERVOIR ELEVATION AND LADDER DETAILS
16	R-3	RESERVOIR SECTIONS AND WATER PIPING SCHEMATIC
17	R-4	RESERVOIR INLET AND OUTLET PIPING DETAILS AND SECTIONS
18	R-5	RESERVOIR DRAIN AND SAMPLING STATION DETAILS
19	R-6	RESERVOIR OVERFLOW SECTIONS AND DETAILS
20	R-7	RESERVOIR DETAILS 1 OF 2
21	R-8	RESERVOIR DETAILS 2 OF 2
22	R-9	RESERVOIR OUTLET VALVE AND METER VAULT DETAILS
23	R-10	RESERVOIR OUTLET SEISMIC VALVE VAULT DETAILS
24	R-11	RESERVOIR INLET VALVE VAULT DETAIL
STRUCTURAL		
25	S-1	GENERAL STRUCTURAL NOTES
26	S-2	RESERVOIR FOUNDATION PLAN
27	S-3	RESERVOIR FOUNDATION SECTIONS AND DETAILS
28	S-4	SLAB REINFORCING PLANS AND TYPICAL DETAILS
ELECTRICAL		
29	E-1	ELECTRICAL SYMBOLS AND LEGEND
30	E-2	ELECTRICAL SITE PLAN
31	E-3	ELECTRICAL ONE-LINE DIAGRAM
32	E-4	ELECTRICAL SCHEDULE
33	E-5	ELECTRICAL DETAILS 1 OF 2
34	E-6	ELECTRICAL DETAILS 2 OF 2
35	E-7	RESERVOIR ELECTRICAL ELEVATION AND ROOF PLAN
36	E-8	GARAGE BUILDING PLAN AND ELECTRICAL DETAILS
37	E-9	ELECTRICAL DETAILS

LOCATION MAPS

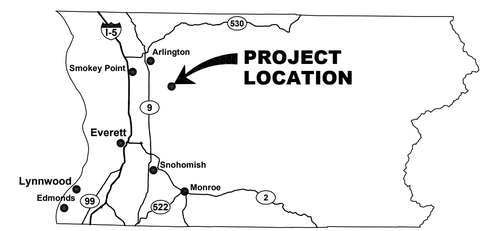

SNOHOMISH COUNTY

VICINITY MAP

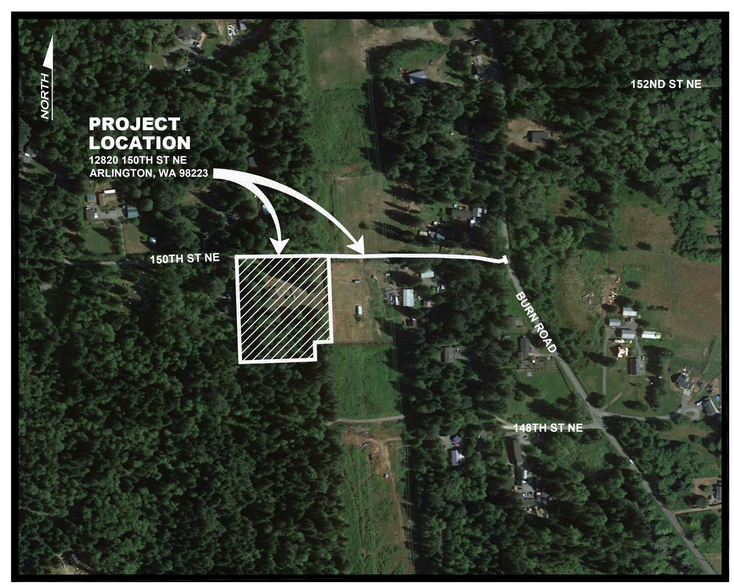

PROJECT CONTACT INFORMATION

PROJECT MANAGER:	MAX SELIN, P.E. (425) 397-3033 WORK (425) 231-1663 CELL
WATER CONSTRUCTION INSPECTOR:	ZACH MCKINNEY (425) 239-0794 CELL
ADDRESS:	SNOHOMISH COUNTY PUD NO. 1 PO BOX 1107 EVERETT, WA 98206

PREPARED BY

BHC Consultants, LLC
1601 Fifth Avenue, Suite 500
Seattle, Washington 98101

206.505.3400
206.505.3406 (fax)
www.bhcconsultants.com

IN ASSOCIATION WITH:

EVERGREEN COATING ENGINEERS, LLC - RESERVOIR DESIGN AND COATING SYSTEMS

NORTHWEST CORROSION ENGINEERS - CATHODIC PROTECTION

DAVID EVANS AND ASSOCIATES, INC - SURVEY

ZIPPER GEO ASSOCIATES, LLC - GEOTECHNICAL ENGINEERING

WETLAND RESOURCES, INC. - CRITICAL AREAS

EQUINOX RESEARCH AND CONSULTING INTERNATIONAL, INC. (ERCI) - CULTURAL RESOURCES

Call 48 Hours Before You Dig
1-800-424-5555
UNDERGROUND SERVICE

No.	DATE	REVISION	APPR.
	MAY 2025	ISSUED FOR PERMIT	

SNOHOMISH COUNTY PUD
PUBLIC UTILITY DISTRICT NO. 1
3301 OLD HARTFORD ROAD, LAKE STEVENS
WASHINGTON 98258 (425) 397-3000
MAILING ADDRESS: P.O. BOX 1107,
EVERETT, WASHINGTON 98206

BURN ROAD RESERVOIR
COVER, PROJECT LOCATION MAPS, AND INDEX OF DRAWINGS

CARLA G. TAITCH
STATE OF WASHINGTON
37426
REGISTERED PROFESSIONAL ENGINEER
05/21/2025

DATE	May 2025
DESIGNED	MTM
DRAWN	PLS
CHECKED	CGT
SCALE	NTS
WO# 100099341	

WE–	965
DWG #	G-1
SHEET	1
OF	37

Path: S:\Cad\Snohomish PUD\23-10882 Burn Rd Res\d Filename: P23-10882_G-1 Plot date: May 21, 2025-04:26:38pm CAD User: abradley.
Xref Filename: | X23-10882_TB | Taitch | X23-10882_Status | Rogers | Stevens | Gibson | McCrosky | Wildhood | Gillespie | Dahl |

SURVEY NOTES

1. **PURPOSE OF THIS SURVEY** THIS SURVEY WAS PERFORMED ON/DURING SEPTEMBER 2022 BY DAVID EVANS AND ASSOCIATES, INC., IN SUPPORT OF AN ENGINEERING SITE PLAN AND IS INTENDED TO BE USED FOR THIS PURPOSE. SPECIFIC INFORMATION SHOWN HEREON SHOULD BE VERIFIED AS TO ITS ACCURACY IF THIS SURVEY IS TO BE USED FOR PURPOSES OTHER THAN WHAT IT WAS INTENDED FOR.

2. **METHODOLOGY** FIELD MEASUREMENTS FOR THIS SURVEY WERE PERFORMED USING A TRIMBLE S7 TOTAL STATION AND A TRIMBLE R10 GPS RECEIVERS. THIS SURVEY COMPLIES WITH THE MINIMUM REQUIRED "ERROR OF CLOSURE" OF 1:10,000 FOR WASHINGTON STATE PLANE COORDINATES AS SET FORTH PER W.A.C. 332-130-090 (AND POSITIONAL TOLERANCE LEVELS OF LESS THAN 0.011 METERS).

3. **BASIS OF BEARING** WASHINGTON COORDINATE SYSTEM, NORTH ZONE, NAD83-2011 EPOCH 2010.00 COORDINATES AS ESTABLISHED BY THE WSRN.

4. **COORDINATE BASIS** ALL COORDINATES AND DISTANCES SHOWN OR DESCRIBED ON THIS SURVEY (INCLUDING THOSE OF RECORD) ARE WASHINGTON COORDINATE SYSTEM NORTH ZONE GROUND VALUES (UNLESS OTHERWISE NOTED) AND ARE BASED ON THE U.S. SURVEY FOOT. POSITIONS WERE DERIVED FROM THE WASHINGTON STATE REFERENCE NETWORK (WSRN). THE GEODETIC POLICY OF THE WSRN IS TO CONSTRAIN ALL WSRN STATIONS TO THE NATIONAL SPATIAL REFERENCE FRAMEWORK (NSRS) OF THE NATIONAL GEODETIC SURVEY (NGS). SOME OF THE WSRN STATIONS ARE NGS CORS, OTHERS HAVE BEEN BLUEBOOKED AT THE NGS, AND THE REST ARE CONSTRAINED TO NGS CORS THROUGH A RIGOROUS NETWORK ADJUSTMENT.

5. **VERTICAL DATUM** NAVD 88

6. **CONTOUR INTERVAL** 1 FEET

7. **CONTOUR LINE ACCURACY AND LIMITATION OF USE** CONTOUR LINES REPRESENTED HEREON CONFORM TO NATIONAL MAP ACCURACY STANDARDS AND ARE SUITABLE FOR CIVIL ENGINEERING DESIGN.

8. **MONUMENTATION VISITATION** ALL SURVEY MONUMENTS AND OTHER SURVEY MARKERS SHOWN HEREON WERE VISITED DURING SEPTEMBER 2022 UNLESS OTHERWISE INDICATED.

9. **ENCUMBRANCES** THIS SURVEY WAS PERFORMED WITHOUT THE BENEFIT OF A TITLE REPORT, ACCORDINGLY, ANY EASEMENTS OR RESTRICTIONS OF RECORD WHICH MAY BE REVEALED IN A TITLE REPORT HAVE NOT BEEN INCLUDED HEREON.

10. **SUBSURFACE CONDITIONS** UNDERGROUND UTILITIES WERE LOCATED BASED ON THE SURFACE EVIDENCE OF UTILITIES (PAINT MARKS, SAW CUTS IN PAVEMENT, COVERS, LIDS, ETC.) AND AS-BUILT INFORMATION PROVIDED BY THE UTILITY PURVEYORS. THE CONTRACTOR SHALL VERIFY THE EXACT LOCATION, ELEVATION AND SIZE OF EXISTING UTILITIES PRIOR TO CONSTRUCTION.

11. **1-800-424-5555** MUST BE CALLED NOT LESS THAN 48 HOURS BEFORE BEGINNING EXCAVATION WHERE ANY UNDERGROUND UTILITIES MAY BE LOCATED. FAILURE TO DO SO COULD MEAN BEARING SUBSTANTIAL REPAIR COSTS. (UP TO THREE TIMES THE COST OF REPAIRS TO THE SERVICE).

12. **PROPERTY LINES** PROPERTY LINES WERE TAKEN FROM AVAILABLE RECORDS OF SURVEYS AND PLATS.

PROJECT REFERENCE DOCUMENTS

1. CONTRACT SPECIFICATIONS
2. SNOHOMISH COUNTY ENGINEERING DESIGN AND DEVELOPMENT STANDARDS CURRENT EDITION.
   SNOHOMISH COUNTY PUD NO. 1 WATER UTILITY STANDARDS AND SPECIFICATIONS FOR DESIGN AND CONSTRUCTION. THE DISTRICT STANDARDS AND SPECIFICATIONS FOR DESIGN AND CONSTRUCTION ARE FOUND AT:
   https://www.snopud.com/wp-content/uploads/2021/08/wpp_stds.pdf
3. GEOTECHNICAL ENGINEERING REPORT (DRAFT) BURN ROAD 726 RESERVOIR PROJECT - ZIPPER GEO, LLC.
4. ARCHEOLOGICAL SURVEY REPORT - EQUINOX RESEARCH AND CONSULTING INTERNATIONAL, INC. (ERCI)
5. CRITICAL AREAS TECHNICAL MEMORANDUM - WETLAND RESOURCES, INC.
6. RECORD OF SURVEY - DAVID EVANS AND ASSOCIATES, INC.
7. SNOHOMISH COUNTY LAND DISTURBANCE PERMIT
8. SNOHOMISH COUNTY EDDS (ENGINEERING DESIGN & DEVELOPMENT STANDARDS)
9. SNOHOMISH COUNTY DRAINAGE MANUAL
10. SNOHOMISH COUNTY CONDITIONAL USE PERMIT

GENERAL NOTES

1. ALL WORK AND MATERIALS SHALL BE IN ACCORDANCE WITH THE LATEST VERSION OF THE DISTRICT'S STANDARDS AND SPECIFICATIONS FOR DESIGN AND CONSTRUCTION AND SNOHOMISH COUNTY EDDS. CONTRACTOR SHALL HAVE A COPY OF THESE DOCUMENTS AND A MINIMUM OF 2 SETS OF THE CONSTRUCTION DRAWINGS AND SPECIFICATIONS FOR THIS PROJECT ON-SITE AT ALL TIMES.
2. BEFORE COMMENCING ANY CONSTRUCTION, THE CONTRACTOR SHALL ATTEND A PRE-CONSTRUCTION MEETING WITH THE DISTRICT'S ENGINEER AND CONSTRUCTION INSPECTOR.
3. CONSTRUCTION DRAWINGS MAY BE SUBJECT TO MINOR FIELD ADJUSTMENTS AS REQUIRED BY THE DISTRICT'S ENGINEER.
4. THE UTILITIES SHOWN ON THE DRAWING HAVE BEEN PLOTTED FROM AVAILABLE INFORMATION. IT IS THE CONTRACTOR'S RESPONSIBILITY TO FIELD VERIFY THE LOCATION AND ELEVATION OF ALL UTILITIES PRIOR TO COMMENCEMENT OF ANY CONSTRUCTION. CONTRACTOR SHALL FIELD VERIFY ALL EXISTING SITE CONDITIONS PRIOR TO CONSTRUCTION. IF A CONFLICT EXISTS BETWEEN WHAT IS SHOWN ON THESE DRAWINGS AND WHAT EXISTS IN THE FIELD, THE CONTRACTOR SHALL NOTIFY THE ENGINEER IMMEDIATELY.
5. THE CONTRACTOR SHALL BE RESPONSIBLE FOR VERIFYING THE CORRECT LOCATIONS OF ALL UTILITIES PRIOR TO CONSTRUCTION. THIS MAY BE DONE BY POTHOLING AND/OR CALLING THE UNDERGROUND UTILITIES LOCATING CENTER A MINIMUM OF 48 HOURS PRIOR TO CONSTRUCTION AT 811 OR 1-800-424-5555 FOR THE UTILITIES PARTICIPATING IN ONE-CALL AND BY DIRECT CONTACT FOR ALL OTHER UTILITY COMPANIES. ANY CONFLICT WITH EXISTING UTILITIES SHALL BE MITIGATED AT THE SOLE EXPENSE OF THE CONTRACTOR.
6. ANY IMPACTS TO EXISTING DISTRICT FACILITIES DUE TO THE CONTRACTOR'S PROPOSED CHANGES TO THIS PLAN SET SHALL BE MITIGATED AT THE CONTRACTOR'S SOLE EXPENSE.
7. THE DISTRICT WILL SECURE ALL UTILITY RIGHT-OF-WAY AND DEMOLITION PERMIT(S) REQUIRED. THE CONTRACTOR SHALL SECURE ALL PERMITS REQUIRED FROM LOCAL AND STATE AGENCIES INCLUDING BUT NOT LIMITED TO LANE CLOSURE, TRAFFIC CONTROL, ALL MATTERS RELATED TO ASBESTOS WORK (IF APPLICABLE TO THE PROJECT), REMOVAL AND DISPOSAL. WORK ON ASBESTOS-CEMENT PIPE IF ENCOUNTERED, SHALL NOT COMMENCE WITHOUT PROPER PERMITS, CERTIFICATIONS, WORKER PROTECTIVE CLOTHING AND BREATHING APPARATUS, AND APPROVED ASBESTOS DISPOSAL BAGS.
8. THE CONTRACTOR SHALL SCHEDULE SHUTDOWNS WITH THE DISTRICT AT LEAST 5 WORKING DAYS IN ADVANCE TO ALLOW FOR CUSTOMER NOTIFICATION. CONNECTION TO THE DISTRICT WATER SYSTEM INCLUDING SWABBING WITH 200 PPM CHLORINE DISINFECTANT SHALL NOT BE DONE WITHOUT DISTRICT STAFF PRESENT.
9. CONTRACTOR SHALL PROVIDE A WATER TRUCK FOR HAUL AND DISPOSAL OF ALL CHLORINATED WATER TO AN APPROVED LOCATION AT THE CONTRACTOR'S SOLE EXPENSE. IN NO CIRCUMSTANCES SHALL WATER CONTAINING CHLORINE BE DISCHARGED INTO PUBLIC OR PRIVATE STORM DRAINAGE SYSTEMS, NATURAL SURFACE WATERS OR ANY AREA THAT LEADS TO PUBLIC OR PRIVATE STORM DRAINAGE SYSTEMS, AND/OR NATURAL SURFACE WATERS.
10. PRESSURE TEST SHALL BE FOR 2 HOURS AT 250 PSI. IF THE PRESSURE AT THE END OF THE 2-HOUR TEST (WITHOUT PUMPING) IS BETWEEN 245 AND 250 PSI, THEN HYDROSTATIC TESTING ALLOWANCE SHALL BE AS DESCRIBED IN TABULAR FORM IN AWWA C600. IF THE PRESSURE FALLS BELOW 245 PSI, THEN THE WATER PIPE BEING TESTED HAS FAILED. PRESSURE TEST SHALL BE AGAINST HYDRANT PORTS (WITH HYDRANT FULLY OPEN), AGAINST ALL CLOSED BLOW OFF ASSEMBLY CAPS WITH VALVE FULLY OPEN AND AGAINST ALL ANGLE METER STOPS. THE CURB STOP ON AIR RELEASE VALVES SHALL BE CLOSED FOR THE PRESSURE TEST AND THEN OPENED AFTER SATISFACTORY TESTING. PRESSURE TESTS SHALL NOT BE PERFORMED AGAINST DISTRIBUTION SYSTEM VALVES.
11. POURED IN PLACE CONCRETE BLOCKING SHALL BE PROVIDED AT ALL FITTINGS AND ANGLE POINTS, INCLUDING THOSE MECHANICALLY RESTRAINED UNLESS OTHERWISE SPECIFIED BY THE DISTRICT'S ENGINEER.
12. ALL MECHANICAL JOINTS, UNLESS OTHERWISE NOTED ON THE PLANS, SHALL USE MECHANICAL THRUST RESTRAINT FOLLOWERS. MECHANICAL THRUST RESTRAINT SHALL BE EBAA IRON MEGALUG/FLANGE, ROMAC, ROMAGRIP, STAR PIPE, STAGRIP, OR AS APPROVED BY THE DISTRICT. REFER TO GENERAL NOTE NO. 14. OF THE SNOHOMISH COUNTY PUD NO. 1 ENGINEERING STANDARDS AND SPECIFICATIONS FOR DESIGN AND CONSTRUCTION.
13. FIELD LOCK GASKETS ARE REQUIRED PER GENERAL NOTE NO. 14 OF SNOHOMISH COUNTY PUD NO. 1 WATER UTILITY STANDARDS AND SPECIFICATIONS FOR DESIGN AND CONSTRUCTION.
14. SURFACE RESTORATION SHALL BE PER SECTION 3.1.10 OF THE SNOHOMISH COUNTY PUD NO. 1 UTILITY STANDARDS AND SPECIFICATIONS.
15. THE CONTRACTOR SHALL COORDINATE THE LOCATION OF THE LAYDOWN AND STAGING AREA WITH THE DISTRICT'S ENGINEER.

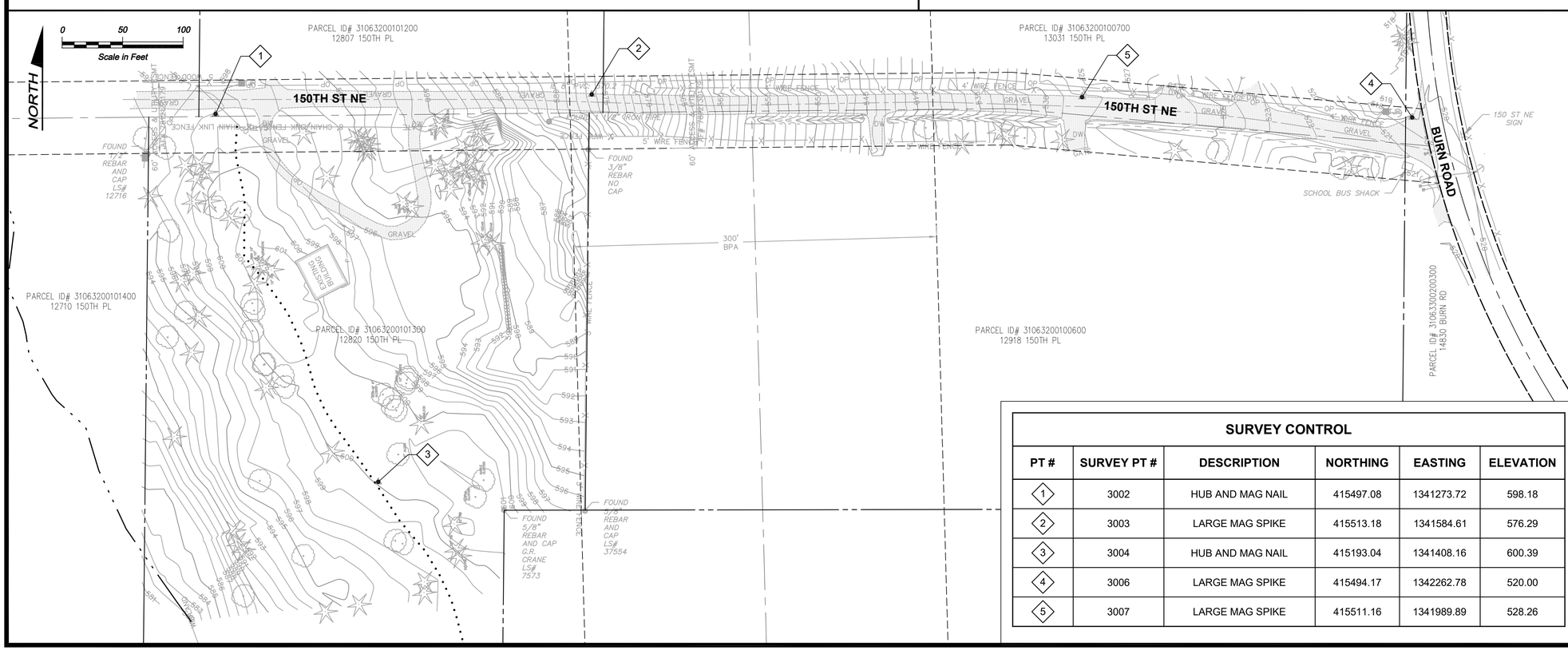

SURVEY CONTROL

PT #	SURVEY PT #	DESCRIPTION	NORTHING	EASTING	ELEVATION
1	3002	HUB AND MAG NAIL	415497.08	1341273.72	598.18
2	3003	LARGE MAG SPIKE	415513.18	1341584.61	576.29
3	3004	HUB AND MAG NAIL	415193.04	1341408.16	600.39
4	3006	LARGE MAG SPIKE	415494.17	1342262.78	520.00
5	3007	LARGE MAG SPIKE	415511.16	1341989.89	528.26

Call 48 Hours Before You Dig
1-800-424-5555
UNDERGROUND SERVICE

No.	DATE	REVISION	APPR.
	MAY 2025	ISSUED FOR PERMIT	

SNOHOMISH COUNTY PUD
PUBLIC UTILITY DISTRICT NO. 1
3301 OLD HARTFORD ROAD, LAKE STEVENS
WASHINGTON 98258 (425) 397-3000
MAILING ADDRESS: P.O. BOX 1107,
EVERETT, WASHINGTON 98206

BURN ROAD RESERVOIR
GENERAL AND SURVEY NOTES

CARLA G. TAILOCH
STATE OF WASHINGTON
37426
REGISTERED PROFESSIONAL ENGINEER
05/21/2025

DATE	May 2025
DESIGNED	MTM
DRAWN	PLS
CHECKED	CGT
SCALE	AS SHOWN

WO# 100099341

WE– 965
DWG # G-2
SHEET 2
OF 36

Path: S:\Cad\Snohomish PUD\23-10882 Burn Rd Res\Vd Filename: P23-10882_G-2 Plot date: May 21, 2025-04:26:20pm CAD User: abradley.
Xref Filename: | X23-10882_TB | Tailoch | X23-10882_Status | x23-10882_Ex Topo | X23-10882_Ex Prop-RW | Rogers | Stevens | Gibson | McCrosky | Wildhood | Gillespie | Dahl |

LEGEND

EXISTING

- CENTERLINE
- RIGHT OF WAY
- PROPERTY LINE
- EASEMENT
- IRON PIPE (FOUND AS NOTED)
- REBAR (FOUND AS NOTED)
- CONTROL POINT (AS NOTED)
- 600 — CONTOUR
- OP — OVERHEAD POWER
- T — TELEPHONE
- W — WATER
- POWER POLE
- GUY POLE
- GUY ANCHOR
- WV — WATER VALVE
- WM — WATER METER
- TELEPHONE JUNCTION BOX
- TJR — TELEPHONE RISER
- STORM CULVERT
- WF-1 — FLAG POLE OR WETLAND FLAG
- WET — WETLAND BOUNDARY
- DITCH
- TOE OF SLOPE
- TOP OF SLOPE
- EDGE OF GRAVEL
- ROCKERY
- FENCE LINE (TYPE AS NOTED)
- MAILBOX
- SIGN
- CONIFER TREE
- DECIDUOUS TREE
- GRAVEL SURFACE
- CONCRETE

PROPOSED

- PIPE
- SPLIT RAIL FENCE
- SILT FENCE
- WATTLE
- HIGH VISIBILITY FENCE
- CLEARING LIMIT
- TO BE REMOVED OR ABANDONED
- 360 — CONTOUR
- SWALE
- WETLAND BUFFER
- APPROXIMATE WETLAND BOUNDARY

PROPOSED (CONTINUED)

- TYPE 2 CATCH BASIN
- CATCH BASIN INSERT
- FLEX EXPANSION JOINT
- 12" CON — TREE REMOVAL
- FLANGE FITTING - BEND
- MECHANICAL JOINT FITTING - BEND
- RESTRAINED JOINT FITTING - BEND
- FLANGE FITTING - TEE
- FLANGE FITTING - CROSS
- MECHANICAL JOINT FITTING - TEE
- MECHANICAL JOINT FITTING - CROSS
- RESTRAINED JOINT FITTING - TEE
- MECHANICAL JOINT FITTING - CROSS
- DIRECTION OF FLOW
- AIR-VACUUM RELEASE ASSEMBLY
- FIRE HYDRANT
- SAMPLE STATION
- FULL DEPTH HMA
- GRAVEL SURFACE
- CAST-IN PLACE CONCRETE
- PRE-CAST CONCRETE
- FOUNDATION MATERIAL
- STRUCTURAL FILL
- PIPE BEDDING
- CSTC
- CSBC
- DRAIN MATERIAL
- PREPARED SUBGRADE, TRENCH BACKFILL
- UNDISTURBED NATIVE GROUND
- COMPACTED BORROW
- SAND
- GROUT
- CONTROL DENSITY FILL
- TOPSOIL
- HYDROSEED, GRASSCRETE
- TEXTURED SURFACE
- QUARRY SPALLS

ABBREVIATIONS

ADA	AMERICAN WITH DISABILITIES ACT
APPROX	APPROXIMATELY
APWA	AMERICAN PUBLIC WORKS ASSOCIATION
AWWA	AMERICAN WATER WORKS ASSOCIATION
BC	BOLT CIRCLE
BGM	BURIED GAS MARKER
BO	BLOW-OFF
C/L	CENTERLINE
CB	CATCH BASIN
CDF	CONTROLLED DENSITY FILL
CMP	CORRUGATED METAL PIPE
CMU	CONCRETE MASONRY UNIT
CON	CONIFER
CONT	CONTINUE
COPO	CITY OF PORT ORCHARD
CPEP	CORRUGATED POLYETHYLENE PIPE
CSBC	CRUSHED SURFACING BASE COURSE
CSTC	CRUSHED SURFACING TOP COURSE
CULV	CULVERT
D	DRAIN
DBH	DIAMETER AT BREAST HEIGHT
DCD	CITY OF PORT ORCHARD DEPARTMENT OF COMMUNITY DEVELOPMENT
DI	DUCTILE IRON
DIP	DUCTILE IRON PIPE
DIA	DIAMETER
DR	DRAIN, DIMENSION RATIO
DWG	DRAWING
E	EAST, ELECTRICAL
EG	FOR EXAMPLE
EL	ELEVATION
ELEC	ELECTRICAL
ETC	ET CETERA
EEWS	EARTHQUAKE EARLY WARNING SYSTEM
EW	EACH WAY
EX	EXISTING
FCA	FLANGED COUPLING ADAPTER
FD	FLOOR DRAIN
FL	FLOOR, FLANGED, FLUORIDE
FT	FOOT
GA	GAUGE
GALV	GALVANIZED
GPS	GLOBAL POSITIONING SYSTEM
GV	GATE VALVE
HDPE	HIGH DENSITY POLYETHYLENE
HMA	HOT MIX ASPHALT
HORIZ	HORIZONTAL
ICV	IRRIGATION CONTROL VALVE
IE	INVERT ELEVATION
INC	INCORPORATED
IPS	IRON PIPE SIZE
IRR	IRRIGATION
L	LENGTH
LF	LINEAR FEET
LLC	LIMITED LIABILITY COMPANY
MAX	MAXIMUM
MB	MAIL BOX
MDD	MAXIMUM DRY DENSITY
MIN	MINIMUM
MJ	MECHANICAL JOINT
MUTCD	MANUAL ON UNIFORM TRAFFIC CONTROL DEVICES
N	NORTH
NAVD 88	NORTH AMERICAN VERTICAL DATUM OF 1988
NIC	NOT IN CONTRACT
NO.	NUMBER
NOM	NOMINAL
NPS	NOMINAL PIPE SIZE
NTS	NOT TO SCALE
OC	ON CENTER
OH	OVERHEAD POWER
P	POWER
PE	POLYETHYLENE
PVC	POLYVINYL CHLORIDE
PG	PERFORMANCE GRADE
PN	PARCEL NUMBER
POMC	PORT ORCHARD MUNICIPAL CODE
PRV	PRESSURE REDUCING VALVE
PSI	POUNDS PER SQUARE INCH
PT	PRESSURE TREATED
R	RADIUS
RD	ROAD, ROOF DRAIN
RJ	RESTRAINED JOINT
RW	RECLAIMED WATER
S	SOUTH, SLOPE
SCH	SCHEDULE
SD	STORM DRAIN
SDMH	STORM DRAIN MANHOLE
SDR	STANDARD DIMENSION RATIO
SE	SOUTHEAST
SS	SANITARY SEWER
SSMH	SANITARY SEWER MANHOLE
SST	STAINLESS STEEL
STD	STANDARD
STL	STEEL
SWMMWW	STORMWATER MANAGEMENT MANUAL FOR WESTERN WASHINGTON
T	TELEPHONE
TBM	TEMPORARY BENCH MARK
TESC	TEMPORARY EROSION AND SEDIMENT CONTROL
THK	THICK
TYP	TYPICAL
VERT	VERTICAL
W/	WITH
W	WEST, WATER, WELL
WA	WASHINGTON
WAC	WASHINGTON ADMINISTRATIVE CODE
WSDOT	WASHINGTON STATE DEPARTMENT OF TRANSPORTATION
WSRN	WASHINGTON STATE RESOURCE NETWORK

DESIGNATIONS

TITLE
TITLE
DETAIL 1
SCALE: 1/2" = 1'-0" C-2

- 1 — DETAIL NUMBER
- C-2 — SHEET NUMBER WHERE DETAIL IS REFERENCED, DASH IF DETAIL APPEARS ON THE SAME SHEET AS SHEET REFERENCED

TITLE
TITLE
SECTION A
SCALE: 1/2" = 1'-0" -

- A — SECTION, ELEVATION OR PROFILE REFERENCE LETTER
- - — DASH IF SECTION IS TAKEN ON THE SAME DRAWING, SHEET NUMBER IF SECTION IS TAKEN ON A DIFFERENT DRAWING

A / C-2
- A — SECTION LETTER
- C-2 — SHEET NUMBER WHERE SECTION IS DRAWN, DASH IF SECTION APPEARS ON SAME SHEET AS CUT

A / C-2
- A — ELEVATION LETTER
- C-2 — SHEET NUMBER WHERE ELEVATION IS DRAWN, DASH IF ELEVATION APPEARS ON SAME SHEET AS REFERENCED

PHOTO REFERENCE

1 / 1 / C-2
- DIRECTION OF PHOTO
- 1 — PHOTO NUMBER
- C-2 — SHEET REFERENCE

DETAIL/SECTION CALLOUT

4/2
- 4 — SHEET REFERENCE
- 2 — DETAIL NUMBER OR SECTION LETTER

EQUIPMENT DESIGNATIONS

EQUIPMENT IS IDENTIFIED AS FOLLOWS:

BOXED NUMBER DESIGNATES NEW EQUIPMENT TO BE SUPPLIED BY THE CONTRACTOR: XX-XXXX

UNBOXED NUMBER DESIGNATES EXISTING EQUIPMENT: XX-XXXX

EQUIPMENT LIST IS INCLUDED FOR THE CONVENIENCE OF THE ENGINEER AND CONTRACTOR, AND IS NOT INTENDED TO REPRESENT PRECISE LISTING OF ALL EQUIPMENT AND DEVICES TO BE PROVIDED UNDER THIS CONTRACT.

PIPING DESIGNATIONS

PIPING IS IDENTIFIED BY ITS SIZE FOLLOWED BY PIPING SYSTEM AS FOLLOWS:

NEW PIPING: 8" W DI
- 8" — PIPE SIZE
- W — PIPING SYSTEM
- DI — GENERAL PIPE MATERIAL

EXISTING PIPING: 8" W

FOR NEW PIPING MATERIAL, FITTINGS, AND VALVES, SEE SPECIFICATIONS.

PIPING SYSTEM DESIGNATIONS FOR EXISTING PIPING INDICATE TYPE OF SERVICE AND TYPE OF MATERIAL IF KNOWN. CONTRACTOR SHALL VERIFY ALL EXISTING PIPE MATERIAL AND NOT RELY ON THIS DESIGNATION PRIOR TO CONSTRUCTION.

Call 48 Hours Before You Dig
1-800-424-5555
UNDERGROUND SERVICE

No.	DATE	REVISION	APPR.
	MAY 2025	ISSUED FOR PERMIT	

SNOHOMISH COUNTY PUD
PUBLIC UTILITY DISTRICT NO. 1
3301 OLD HARTFORD ROAD, LAKE STEVENS
WASHINGTON 98258 (425) 397-3000
MAILING ADDRESS: P.O. BOX 1107, EVERETT, WASHINGTON 98206

BURN ROAD RESERVOIR
LEGEND, ABBREVIATIONS, AND DESIGNATIONS

CARLA G. TALICH — STATE OF WASHINGTON — 37426 — REGISTERED PROFESSIONAL ENGINEER
05/21/2025

DATE	May 2025
DESIGNED	MTM
DRAWN	PLS
CHECKED	CGT
SCALE	N/A

WO# 100099341

WE— 965
DWG # G-3
SHEET 3
OF 36

Path: S:\Cad\Snohomish PUD\23-10882 Burn Rd Res\d Filename: P23-10882_G-3 Plot date: May 21, 2025-04:27:05pm CAD User: abradley.
Xref Filename: | X23-10882_Status | X23-10882_TB | Tailch | Rogers | Stevens | Gibson | McCrosky | Wildhood | Gillespie | Dahl |

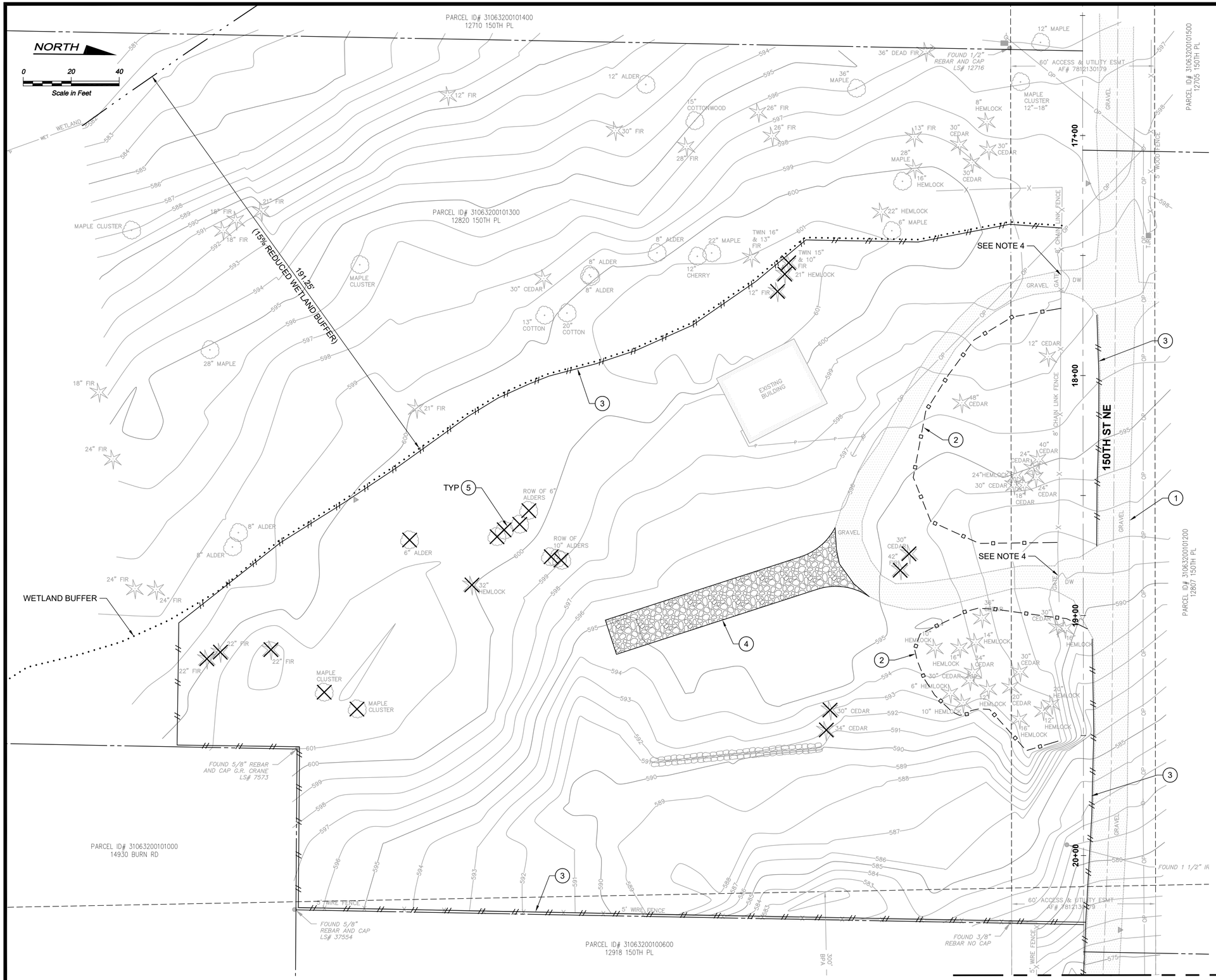

NOTES:

1. SEE DRAWING EC-3 FOR TESC NOTES AND DETAILS.
2. CONSTRUCTION ENTRANCE SHALL BE MAINTAINED THROUGH COMPLETION OF THE PROJECT.
3. WATER UTILITY EASEMENT INFORMATION IS AVAILABLE FROM THE PUD UPON REQUEST.
4. SAVE AND PROTECT EXISTING FENCE AND GATES.

CONSTRUCTION NOTES:

1. 150TH ST NE SHALL BE MAINTAINED DURING CONSTRUCTION AND RESTORED TO ITS PRECONSTRUCTION CONDITION, OR BETTER, UPON COMPLETION OF THE PROJECT. BEFORE WORK COMMENCES, 150TH ST NE, FROM BURN ROAD TO STATION 17+00, SHALL BE PHOTO DOCUMENTED. DURING CONSTRUCTION AND UPON COMPLETION OF THE PROJECT, THE ROAD SURFACE SHALL BE REPAIRED AS NEEDED TO MATCH PRECONSTRUCTION CONDITIONS OR BETTER USING CSTC, PLACED AND COMPACTED WITH A MINIMUM THICKNESS OF 2 INCHES.
2. TREE PROTECTION/HIGH- VISIBILITY FENCE PER WSDOT STANDARD DETAIL I-10.10-01, OR APPROVED ALTERNATE.
3. SILT FENCE PER DETAIL 1/EC-3, OR STRAW WATTLE PER DETAIL 4/EC-3, OR APPROVED ALTERNATE. WATTLES SHALL BE USED DURING WATER MAIN INSTALLATION WITHIN 150TH ST NE UNLESS OTHERWISE APPROVED BY THE DISTRICT ENGINEER.
4. STABILIZED CONSTRUCTION ENTRANCE, PER DETAIL 2/EC-3. REMOVE PRIOR TO PAVEMENT INSTALLATION, AS REQUIRED BY THE DISTRICT.
5. REMOVE TREE

FINAL SITE STABILIZATION NOTES:

1. UNLESS OTHERWISE SPECIFIED, ANY DISTURBED AREA SHALL BE REVEGETATED BY HYDROSEEDING. SEE DWG C-2 FOR APPROXIMATE LIMITS, AND TABLE 4.4/C-7 FOR SEED MIX REQUIREMENTS.
2. MAINTAIN TESC FEATURES UNTIL FINAL ACCEPTANCE OR AS OTHERWISE DIRECTED BY THE DISTRICT ENGINEER.

No.	DATE	REVISION	APPR.
	MAY 2025	ISSUED FOR PERMIT	

SNOHOMISH COUNTY PUD
PUBLIC UTILITY DISTRICT NO. 1
3301 OLD HARTFORD ROAD, LAKE STEVENS
WASHINGTON 98258 (425) 397-3000
MAILING ADDRESS: P.O. BOX 1107,
EVERETT, WASHINGTON 98206

BURN ROAD RESERVOIR
EXISTING CONDITIONS AND TESC PLAN 1 OF 2

CARLA G. TALICH
STATE OF WASHINGTON
37426
REGISTERED PROFESSIONAL ENGINEER
05/21/2025

DATE	May 2025
DESIGNED	MTM
DRAWN	PLS
CHECKED	CGT
SCALE	1"=20'-0"

WO# 100099341

WE-	965
DWG #	EC-1
SHEET	4
OF	36

Call 48 Hours Before You Dig
1-800-424-5555
UNDERGROUND SERVICE

Path: S:\Cad\Snohomish PUD\23-10882 Burn Rd Res\d Filename: P23-10882_EC-1-2 Plot date: May 21, 2025-04:28:57pm CAD User: abradley.
Xref Filename: | X23-10882_Ex Topo | X23-10882_Status | X23-10882_TB | X23-10882_Ex Prof | Talich | X23-10882_Ex Prop-RW | X23-10882_Dwg Layout | Rogers | Stevens | Gibson | McCrosky | Wildhood | Gillespie | Dahl |

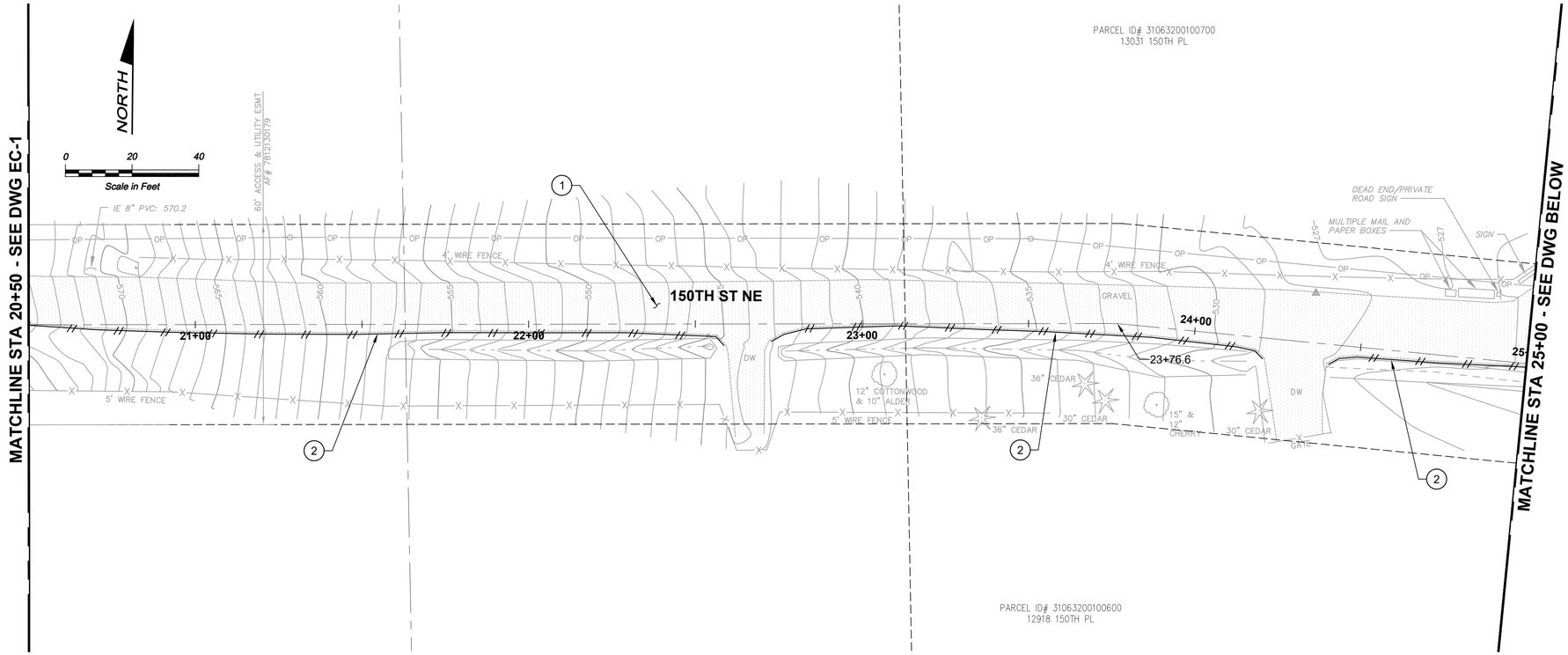

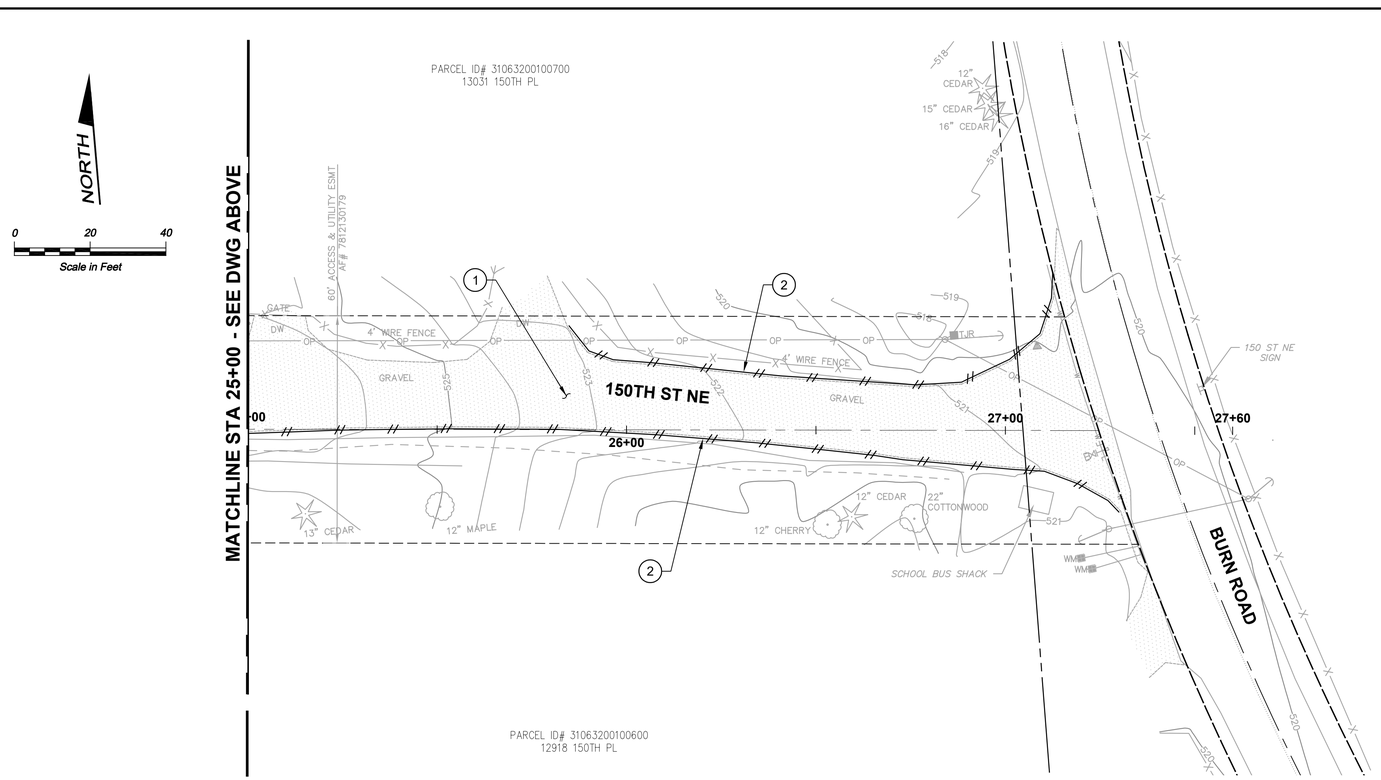

NOTES:

1. SEE DRAWING EC-3 FOR TESC NOTES AND DETAILS.
2. WATER UTILITY EASEMENT INFORMATION IS AVAILABLE FROM THE PUD UPON REQUEST.

CONSTRUCTION NOTES:

1. 150TH ST NE SHALL BE MAINTAINED DURING CONSTRUCTION AND RESTORED TO ITS PRECONSTRUCTION CONDITION, OR BETTER, UPON COMPLETION OF THE PROJECT. BEFORE WORK COMMENCES, 150TH ST NE, FROM BURN ROAD TO STATION 17+00, SHALL BE PHOTO DOCUMENTED. DURING CONSTRUCTION AND UPON COMPLETION OF THE PROJECT, THE ROAD SURFACE SHALL BE REPAIRED AS NEEDED TO MATCH PRECONSTRUCTION CONDITIONS OR BETTER USING CSTC, PLACED AND COMPACTED WITH A MINIMUM THICKNESS OF 2 INCHES.
2. SILT FENCE PER DETAIL 1/EC-3, OR STRAW WATTLE PER DETAIL 4/EC-3, OR APPROVED ALTERNATE. WATTLES SHALL BE USED DURING WATER MAIN INSTALLATION WITHIN 150TH ST NE UNLESS OTHERWISE APPROVED BY THE DISTRICT ENGINEER.

FINAL SITE STABILIZATION NOTES:

1. UNLESS OTHERWISE SPECIFIED, ANY DISTURBED AREA SHALL BE REVEGETATED BY HYDROSEEDING. SEE DWG C-2 FOR APPROXIMATE LIMITS, AND TABLE 4.4/C-7 FOR SEED MIX REQUIREMENTS.
2. MAINTAIN TESC FEATURES UNTIL FINAL ACCEPTANCE OR AS OTHERWISE DIRECTED BY THE DISTRICT ENGINEER.

No.	DATE	REVISION	APPR.
	MAY 2025	ISSUED FOR PERMIT	

SNOHOMISH COUNTY PUD
PUBLIC UTILITY DISTRICT NO. 1
3301 OLD HARTFORD ROAD, LAKE STEVENS
WASHINGTON 98258 (425) 397-3000
MAILING ADDRESS: P.O. BOX 1107,
EVERETT, WASHINGTON 98206

BURN ROAD RESERVOIR
EXISTING CONDITIONS AND TESC PLANS 2 OF 2

CARLA G. TALICH
STATE OF WASHINGTON
37426
REGISTERED PROFESSIONAL ENGINEER
05/21/2025

DATE	May 2025
DESIGNED	MTM
DRAWN	PLS
CHECKED	CGT
SCALE	1"=20'-0"

WO# 100099341

WE–	965
DWG #	EC-2
SHEET	5
OF	36

811
Call 48 Hours Before You Dig
1-800-424-5555
UNDERGROUND SERVICE

Path: S:\Cad\Snohomish PUD\23-10882 Burn Rd Resv\d Filename: P23-10882_EC-1-2 Plot date: May 21, 2025-04:29:43pm CAD User: abradley.
Xref Filename: | X23-10882_Ex Topo | X23-10882_Status | X23-10882_TB | X23-10882_Ex Prof | Talich | X23-10882_Ex Prop-RW | X23-10882_Dwg Layout | Rogers | Stevens | Gibson | McCrosky | Wildhood | Gillespie | Dahl |

TESC NOTES AND BEST MANAGEMENT PRACTICES (BMP'S)

BEST MANAGEMENT PRACTICES (BMP'S) TO CONTROL EROSION SHALL INCLUDE BUT NOT BE LIMITED TO THE FOLLOWING:

1. THE CONTRACTOR SHALL BE RESPONSIBLE FOR ALL TEMPORARY AND PERMANENT EROSION AND SEDIMENTATION CONTROL MEASURES REQUIRED FOR THE PROJECT.
2. THE CONTRACTOR SHALL SUBMIT CERTIFIED AND SEDIMENT CONTROL LEAD (CESCL) INFORMATION TO THE DISTRICT NO LATER THAN THE PRE-CONSTRUCTION MEETING.
3. ALL TEMPORARY EROSION AND SEDIMENTATION CONTROL (TESC) MEASURES SHALL BE IN ACCORDANCE WITH THE GOVERNING JURISDICTION'S STANDARDS WHERE THE WORK IS BEING CONSTRUCTED.
4. TESC MEASURES SHALL BE TAKEN BY THE CONTRACTOR DURING CONSTRUCTION TO PREVENT SILT AND DEBRIS FROM ENTERING EXISTING STORM DRAINAGE FACILITIES AND WATERWAYS IN COMPLIANCE WITH THE PLANS, SPECIFICATIONS, AND THE WASHINGTON STATE DEPARTMENTOF ECOLOGY STORM WATER MANGAMENT MANUAL FOR WESTERN WASHINGTON (SWMMWW) OR SNOHOMISH COUNTY DRAINAGE MANUAL, CURRENT EDITIONS, DEPENDING ON THE PROJECT LOCATION'S GOVERNING JURISDICTION.
5. THE DISTRICT WILL DEVELOP AND SUBMIT A PROJECT CONSTRUCTION STORM WATER POLLUTION PLAN (SWPPP) TO THE APPLICABLE GOVERNING JURISDICTION FOR APPROVAL PRIOR TO CONSTRUCTION. THE DISTRICT WILL TRANSFER THE SWPPP TO THE CONTRACTOR PRIOR TO CONSTRUCTION. THE CONTRACTOR WILL THEN BE RESPONSIBLE TO REVISE THE SWPPP AS NEEDED DURING CONSTRUCTION.
6. THE TESC MEASURES SHOWN ON THE PLANS REPRESENT THE MINIMUM REQUIREMENTS. ACTUAL TESC MEASURES SHALL BE DETERMINED AND FIELD LOCATED BY THE CONTRACTOR TO SUIT CONDITIONS AND SHALL BE IN COMPLIANCE WITH THE GOVERNING JURISDICTION'S STANDARDS WHERE THE WORK IS BEING CONSTRUCTED.
7. ALL REQUIRED EROSION/SEDIMENTATION CONTROL FACILITIES SHALL BE CONSTRUCTED AND IN OPERATION PRIOR TO EARTH DISTURBANCE AND/OR OTHER CONSTRUCTION TO ENSURE THAT SEDIMENT LADEN WATER DOES NOT LEAVE THE PROJECT SITE, ENTER THE DRAINAGE SYSTEM, OR VIOLATE APPLICABLE WATER QUALITY STANDARDS. ALL EROSION AND SEDIMENT FACILITIES SHALL BE MAINTAINED IN A SATISFACTORY CONDITION UNTIL SUCH TIME THAT CLEARING AND/OR CONSTRUCTION IS COMPLETED AND POTENTIAL FOR PROJECT ONSITE EROSION HAS PASSED. THE CONTRACTOR SHALL BE RESPONSIBLE FOR THE IMPLEMENTATION, MAINTENANCE, REPLACEMENT, AND ADDITIONS TO EROSION/SEDIMENTATION CONTROL SYSTEMS.
8. THE CONTRACTOR SHALL BE RESPONSIBLE FOR FIELD LOCATING THE CLEARING LIMITS AND ESTABLISHING THOSE BOUNDARIES WITH BRIGHT COLORED FLAGGING AS NEEDED. THE CONTRACTOR SHALL CLEAR TO ONLY THOSE LIMITS AS ESTABLISHED, APPROVED BY THE DISTRICT, AND FLAGGED IN THE FIELD. ALL FLAGGING SHALL BE MAINTAINED BY THE CONTRACTOR FOR THE DURATION OF THE CONSTRUCTION.
9. ALL DISTURBED AREAS THAT HAVE BEEN STRIPPED OF VEGETATION AND WHERE NO FURTHER WORK IS ANTICIPATED FOR A PERIOD OF 30 DAYS OR MORE SHALL BE IMMEDIATELY STABILIZED WITH MULCHING, GRASS PLANTING, OR OTHER APPROVED EROSION CONTROL TREATMENT APPLICABLE TO THE TIME OF YEAR. GRASS SEEDING ALONE WILL BE ACCEPTABLE ONLY DURING THE MONTHS OF APRIL THROUGH SEPTEMBER. INCLUSIVE SEEDING MAY PROCEED, WHENEVER IT IS IN THE INTEREST OF THE CONTRACTOR, BUT MUST BE AUGMENTED WITH MULCHING, NETTING, EROSION BLANKETS, OR OTHER APPROVED TREATMENT WHEN SEEDING OCCURS OUTSIDE THE SPECIFIED TIME PERIOD.
10. DEWATERING WATER SHALL BE HANDLED TO ENSURE DISCHARGE MEETS REGULATING WATER QUALITY STANDARDS. DEWATERING DISCHARGE AND OTHER TESC ACTIVITIES SHALL CONFORM TO THE APPROVED CONSTRUCTION SWPPP.
11. THE CONTRACTOR SHALL BE RESPONSIBLE FOR STREET CLEANING AND/OR VACUUM SWEEPING (ONSITE AND OFFSITE), UPON THE DIRECTION OF THE DISTRICT, TO UNDERTAKE THE MEASURES DEEMED NECESSARY TO AFFECT SUCH CONTROL.
12. STORM DRAIN RUN OFF FROM THE CONSTRUCTION SITE SHALL NOT AFFECT ADJACENT PROPERTIES. WHERE POSSIBLE, THE CONTRACTOR SHALL MAINTAIN NATURAL VEGETATION FOR SILT CONTROL.
13. IN CASE EROSION OR SEDIMENTATION OCCURS TO ADJACENT PROPERTY OWNERS, ALL CONSTRUCTION WORK WITHIN THE AREA THAT MAY FURTHER AGGRAVATE THE SITUATION SHALL CEASE AND THE CONTRACTOR SHALL IMMEDIATELY COMMENCE RESTORATION METHODS. RESTORATION ACTIVITY WILL CONTINUE UNTIL SUCH TIME AS THE DISTRICT AND AFFECTED PROPERTY OWNERS ARE SATISFIED.
14. THE IMPLEMENTATION OF ALL TESC PLANS AND CONSTRUCTION, MAINTENANCE, REPLACEMENT, AND UPGRADING ALL TESC FACILITIES IS THE RESPONSBILITY OF THE CONTRACTOR UNTIL ALL CONSTRUCTION IS APPROVED AND ACCEPTED BY THE DISTRICT.
15. SHOULD THE TESC MEASURES TAKEN AND/OR UPGRADED OR EXPANDED FACILITIES/MEASURED BE INADEQUATE TO CONTROL EROSION AND SEDIMENTATION, THE CONTRACTOR SHALL INSTALL ADDITIONAL FEATURES NECESSARY TO PROTECT ADJACENT PROPERTIES, SENSITIVE AREAS, NATURAL WATER COURSES AND/OR STORM DRAINAGE SYSTEMS.
16. THE TESC FACILITIES SHALL BE INSPECTED BY THE CONTRACTOR'S CESCL OF RECORD AFTER EACH STORM AND DAILY DURING PROLONGED RAINFALL. THE TESC FACILITIES SHALL BE MAINTAINED AS NECESSARY OR AS DIRECTED BY THE DISTRICT ENGINEER TO ENSURE THEIR CONTINUED FUNCTIONING. NECESSARY REPAIRS OR REPLACEMENT OF FACILITIES SHALL BE ACCOMPLISHED PROMPTLY. SEDIMENT DEPOSITS SHALL BE REMOVED AFTER EACH STORM EVENT AND/OR WHEN THE LEVEL OF DEPOSITION REACHES APPROXIMATELY ONE-THIRD THE MAXIMUM POTENTIAL DEPTH.

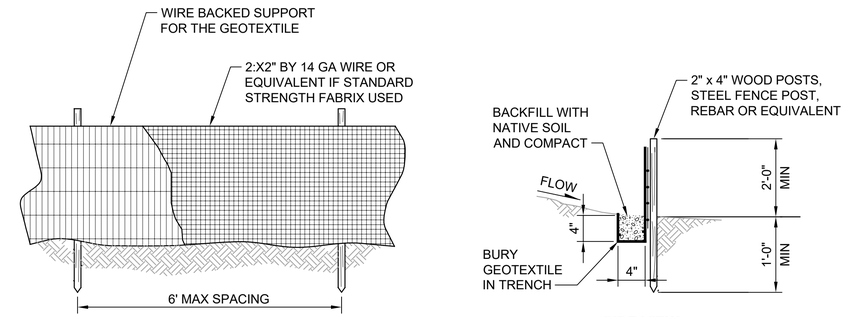

NOTES:

1. MAXIMIZE DETENTION OF STORMWATER BY PLACING FENCE AS FAR AWAY FROM THE TOE OF SLOPE AS POSSIBLE WITHOUT ENCROACHING ON SENSITIVE AREAS OR OUTSIDE OF THE CLEARING BOUNDARIES.
2. INSTALL SILT FENCING ALONG CONTOURS WHENEVER POSSIBLE.
3. INSTALL THE ENDS OF THE SILT FENCE TO POINT SLIGHTLY UP-SLOPE TO PREVENT SEDIMENT FROM FLOWING AROUND THE ENDS OF THE FENCE.

SILT FENCE
DETAIL 1
NTS TYP

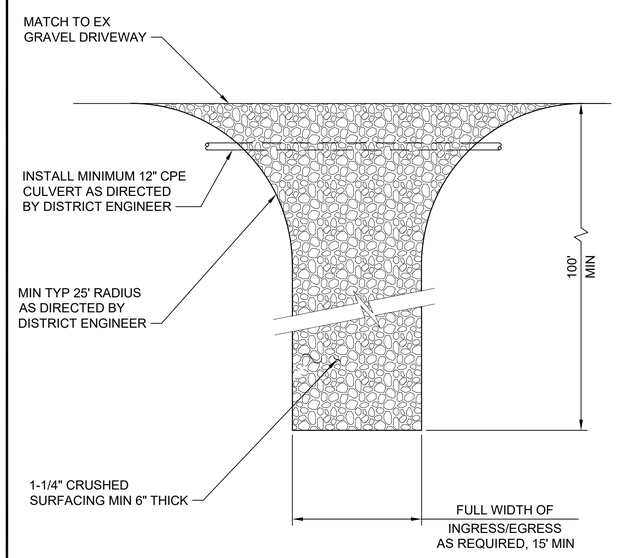

STABILIZED CONSTRUCTION ENTRANCE
DETAIL 2
TYP TYP

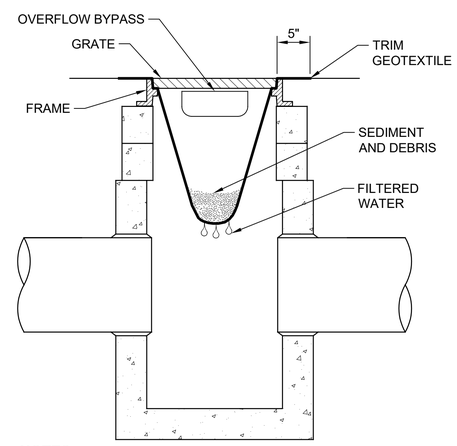

NOTES:

1. CONTRACTOR SHALL INSTALL CB FILTER INSERTS BEFORE START OF CONSTRUCTION AND REMOVE AND DISPOSE OF FILTERS AFTER CONSTRUCTION IS COMPLETE OR AS DIRECTED BY THE ENGINEER.
2. CHECK ALL INSERTS AFTER EVERY RAIN EVENT AND AT LEAST EVERY 2 WEEKS. REMOVE WHEN FILLED TO HALF-WAY MARK. REMOVE SEDIMENT AND RE-USE, OR REPLACE INSERT(S) IF DAMAGED OR PLUGGED.
3. ALL CB'S INSTALLED FOR THIS PROJECT SHALL HAVE STORM DRAIN INLET PROTECTION AT THE TIME OF INSTALLATION.

STORM DRAIN INLET PROTECTION
DETAIL 3
NTS TYP

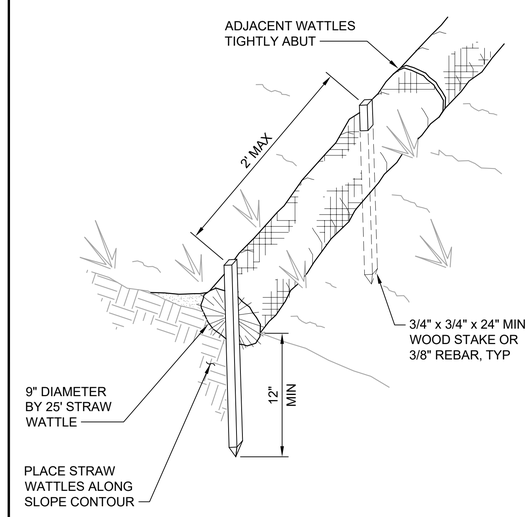

TYPICAL WATTLE INSTALLATION
DETAIL 4
TYP TYP

Call 48 Hours Before You Dig
1-800-424-5555
UNDERGROUND SERVICE

No.	DATE	REVISION	APPR.
	MAY 2025	ISSUED FOR PERMIT	

SNOHOMISH COUNTY PUD
PUBLIC UTILITY DISTRICT NO. 1
3301 OLD HARTFORD ROAD, LAKE STEVENS
WASHINGTON 98258 (425) 397-3000
MAILING ADDRESS: P.O. BOX 1107,
EVERETT, WASHINGTON 98206

BURN ROAD RESERVOIR
TESC NOTES AND DETAILS

CARLA G. TALICH, STATE OF WASHINGTON, 37426, REGISTERED PROFESSIONAL ENGINEER
05/21/2025

DATE	May 2025
DESIGNED	MTM
DRAWN	PLS
CHECKED	CGT
SCALE	AS SHOWN

WO# 100099341

WE– 965
DWG # EC-3
SHEET 6
OF 36

Path: S:\Cad\Snohomish PUD\23-10882 Burn Rd Res\d Filename: P23-10882_EC-3 Plot date: May 21, 2025-04:30:34pm CAD User: abradley.
Xref Filename: | X23-10882_TB | Talich | X23-10882_Status | Rogers | Stevens | Gibson | McCrosky | Wilthood | Gillespie | Dahl |

NORTH

0 50 100
Scale in Feet

STA	NORTHING	EASTING
17+00 (BEGIN)	415343.35	1341432.78
19+00	415317.04	1341441.69
21+00	415290.12	1341448.43
23+00	415276.75	1341438.57
23+76.6 (VERTEX)	415303.23	1341527.69
25+00	415319.94	1341552.15
27+60 (END)	415330.31	1341559.98

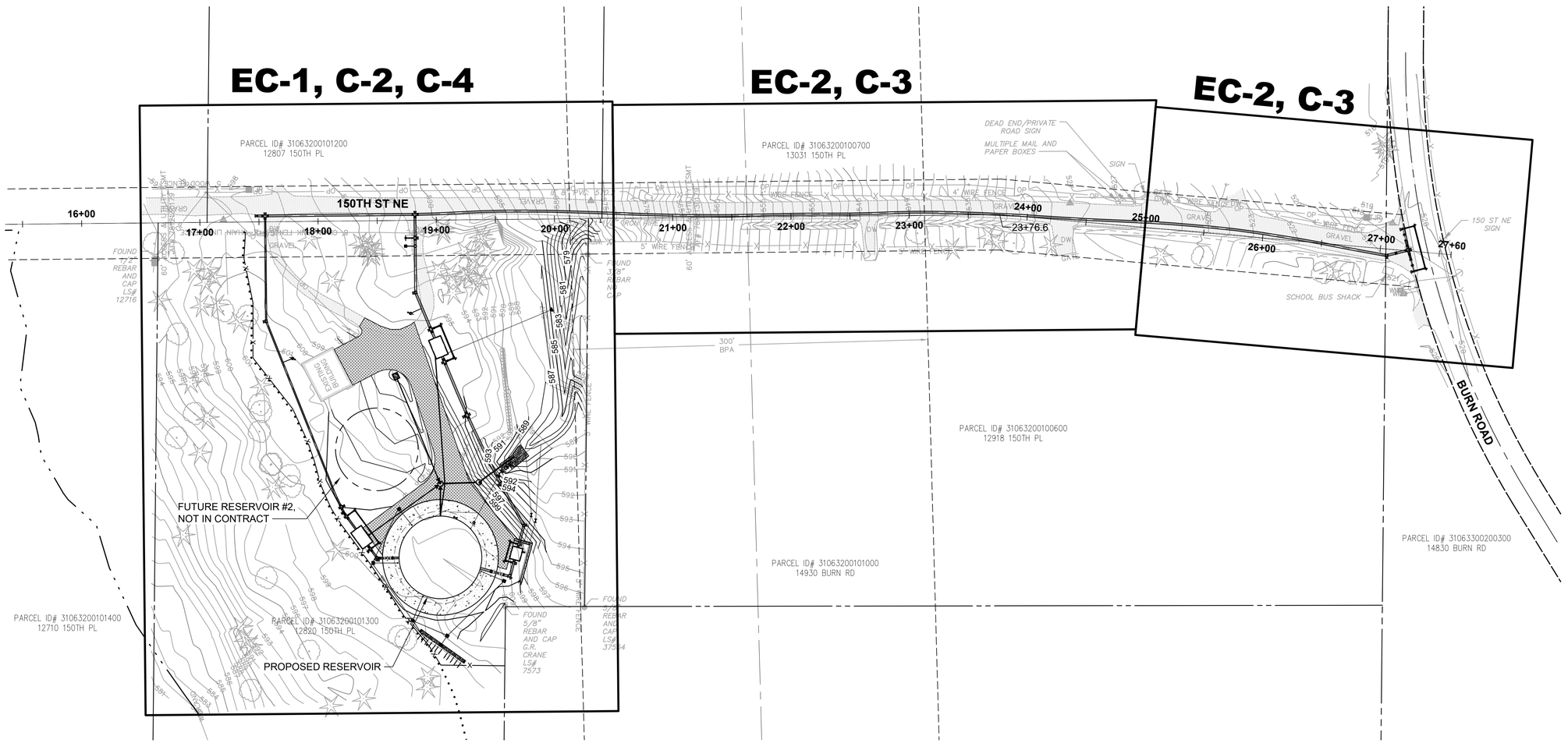

No.	DATE	REVISION	APPR.
	MAY 2025	ISSUED FOR PERMIT	

SNOHOMISH COUNTY PUD
PUBLIC UTILITY DISTRICT NO. 1
3301 OLD HARTFORD ROAD, LAKE STEVENS
WASHINGTON 98258 (425) 397-3000
MAILING ADDRESS: P.O. BOX 1107,
EVERETT, WASHINGTON 98206

BURN ROAD RESERVOIR
OVERALL SITE AND CIVIL KEY PLAN

MATTHEW DAVISON TAYLOR MCCROSKY
STATE OF WASHINGTON
30128392
REGISTERED PROFESSIONAL ENGINEER
05/21/2025

DATE	May 2025
DESIGNED	MTM
DRAWN	JL
CHECKED	CGT
SCALE	
WO# 100099341	

WE– 965
DWG # C-1
SHEET 7
OF 36

811
Call 48 Hours Before You Dig
1-800-424-5555
UNDERGROUND SERVICE

Path: S:\Cad\Snohomish PUD\23-10882 Burn Rd Resv\d Filename: P23-10882_C-1 Plot date: May 21, 2025-04:31:34pm CAD User: abradley;
Xref Filename: | X23-10882_Ex Topo | X23-10882_Ex Prop | X23-10882_Status | X23-10882_TB | X23-10882_Ex Prof | X23-10882_Prop Site | Talich | Rogers | X23-10882_Dwg Layout | X23-10882_Prop Grad | Gillespie | Dahl |

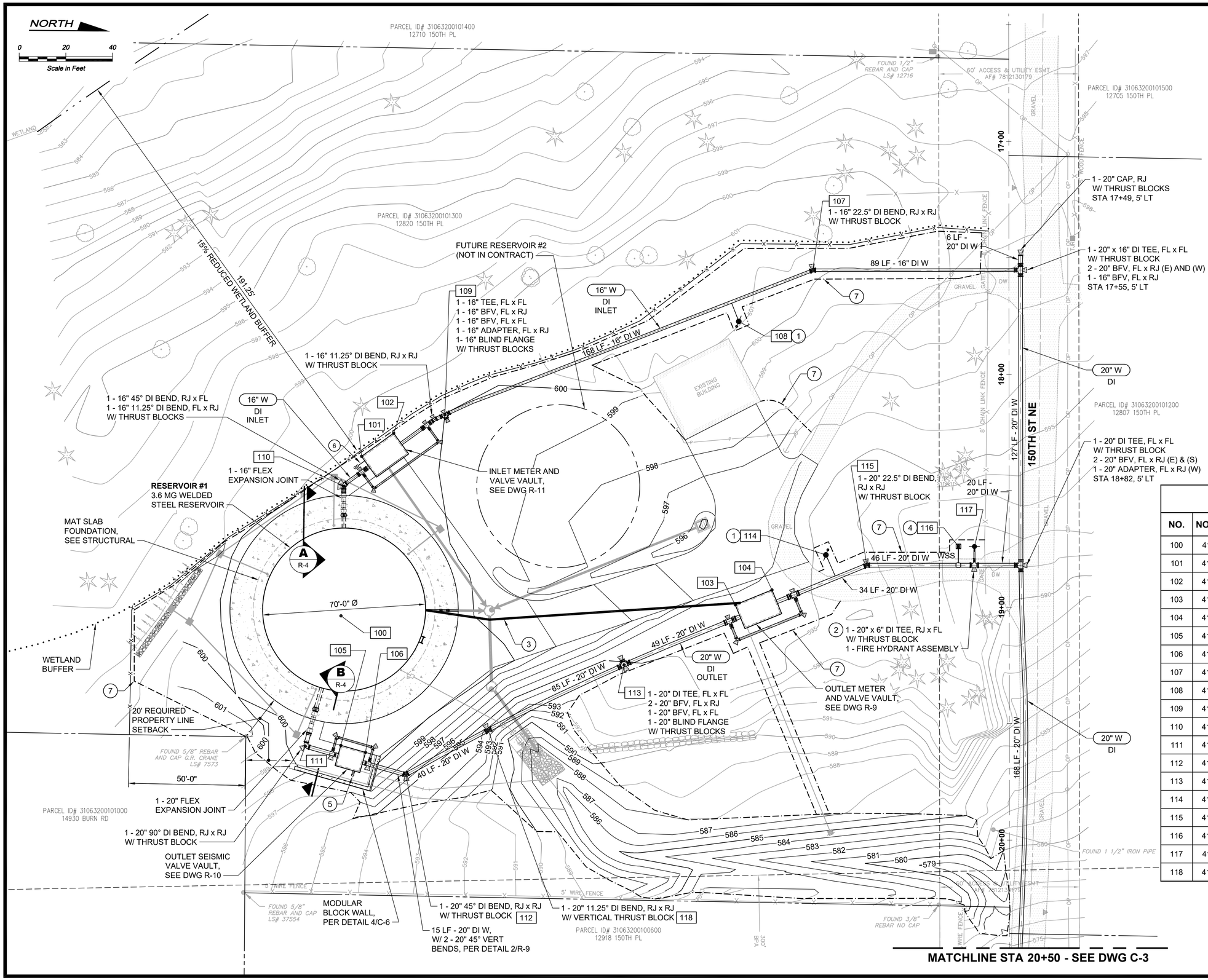

NOTES:

1. CONTRACTOR SHALL HAVE PUD CREWS ONSITE TO RESTRAIN UTILITY POLES AS NEEDED FOR WATER MAIN INSTALLATION.
2. SEE DWG C-4 FOR DRAINAGE PLAN.

CONSTRUCTION NOTES:

1. INSTALL AIR-VAC ASSEMBLY AT WATER MAIN HIGH POINT PER PUD STANDARD DETAIL 401.
2. INSTALL NEW FIRE HYDRANT ASSEMBLY PER PUD STANDARD DETAIL 201.
3. 4" PVC PIPE W/ 1" POLYPIPE FOR TRANSDUCER, SEE DWGS R-5 AND R-9.
4. SAMPLING STATION PER DETAIL 3/R-5.
5. AIR/VAC VALVE VENT - SEE DWG R-10 FOR AIR/VAC VALVE INSTALLATION IN OUTLET SEISMIC VALVE VAULT.
6. AIR/VAC VALVE VENT - SEE DWG R-11 FOR AIR/VAC VALVE INSTALLATION IN INLET METER AND VALVE VAULT.
7. APPROXIMATE RESTORATION LIMITS. ALL DISTURBED PERVIOUS SURFACES SHALL BE RESTORED WITH A 6-INCH LAYER OF T5.13 SOIL PER SNOHOMISH COUNTY DRAINAGE MANUAL, VOLUME V RUNOFF TREATMENT BMP'S AND RESTORED PER NOTE 1 ON SHEET EC-1.

COORDINATE CONTROL

NO.	NORTHING	EASTING	NOTE
100	415211.31	1341457.29	SEE R-2 FOR BASE EL
101	415218.23	1341391.45	SEE R-11 FOR RIM EL
102	415231.93	1341381.38	SEE R-11 FOR RIM EL
103	415379.19	1341453.79	SEE R-10 FOR RIM EL
104	415394.88	1341447.25	SEE R-10 FOR RIM EL
105	415210.42	1341515.61	SEE R-9 FOR RIM EL
106	415221.03	1341518.53	SEE R-9 FOR RIM EL
107	415411.17	1341309.86	
108	415379.64	1341332.11	
109	415253.85	1341373.31	
110	415210.83	1341404.34	
111	415195.16	1341516.08	
112	415238.42	1341527.97	
113	415331.70	1341480.01	
114	415417.88	1341432.03	
115	415435.45	1341436.29	
116	415474.75	1341427.88	
117	415481.61	1341427.85	
118	415273.54	1341508.49	

Call 48 Hours Before You Dig
1-800-424-5555
UNDERGROUND SERVICE

No.	DATE	REVISION	APPR.
	MAY 2025	ISSUED FOR PERMIT	

SNOHOMISH COUNTY PUD
PUBLIC UTILITY DISTRICT NO. 1
3301 OLD HARTFORD ROAD, LAKE STEVENS
WASHINGTON 98258 (425) 397-3000
MAILING ADDRESS: P.O. BOX 1107,
EVERETT, WASHINGTON 98206

BURN ROAD RESERVOIR
RESERVOIR SITE WATER PLAN

MADISON TAYLOR MCCOSKY
STATE OF WASHINGTON
50123392
REGISTERED PROFESSIONAL ENGINEER
05/21/2025

DATE	May 2025
DESIGNED	MTM
DRAWN	PLS
CHECKED	CGT
SCALE	

WO# 100099341

WE– 965
DWG # C-2
SHEET 8
OF 36

Path: S:\Cad\Snohomish PUD\23-10882 Burn Rd Resv\d Filename: P23-10882_C-2-3 Plot date: May 21, 2025-04:39:49pm CAD User: abradley
Xref Filename: | X23-10882_Ex Topo | X23-10882_TB | X23-10882_Ex Prof | Tailch | X23-10882_Ex Prop-RW | X23-10882_Prop Site | X23-10882_Prop Util | X23-10882_Ex Grad | Dahl |

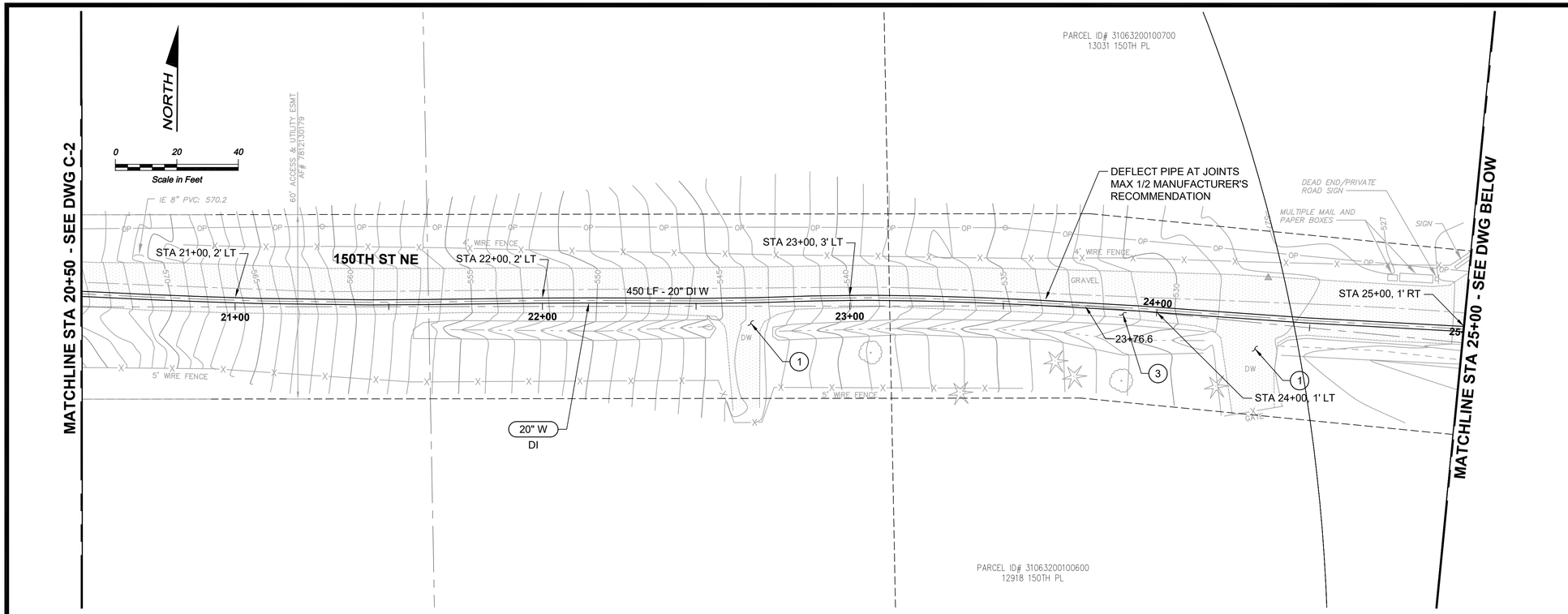

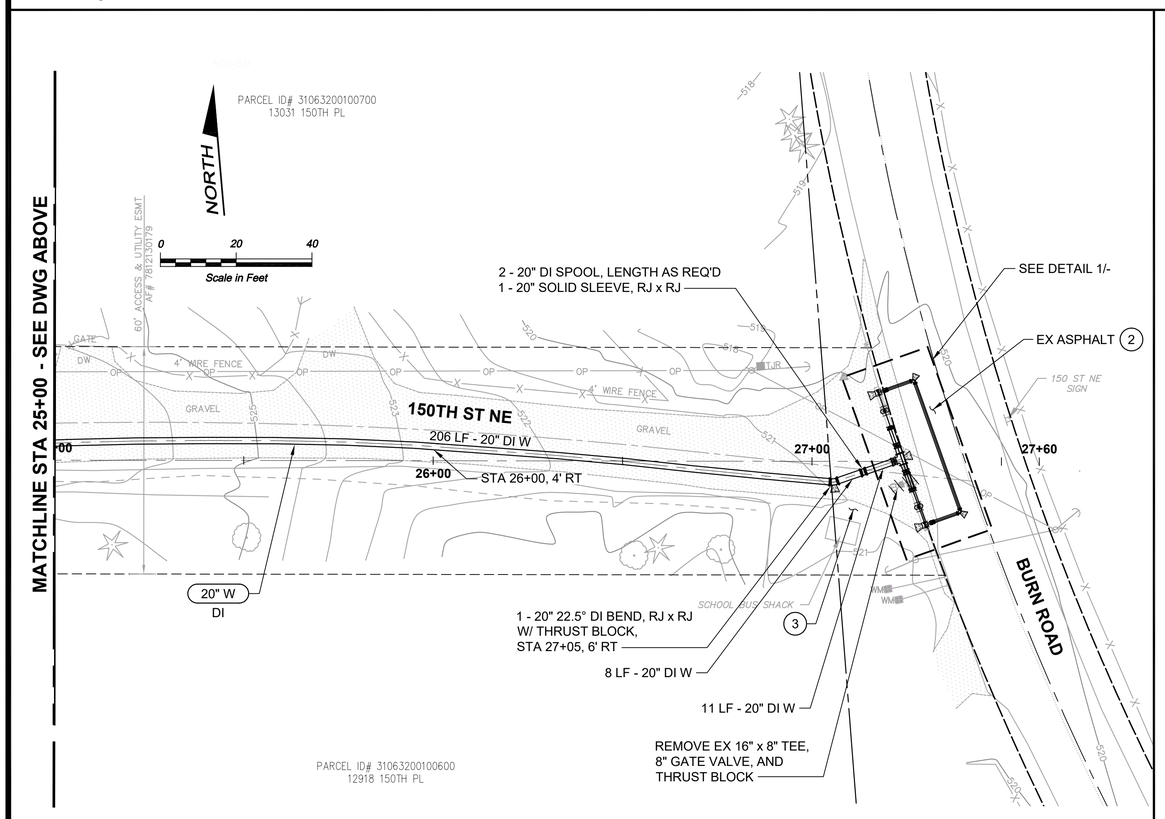

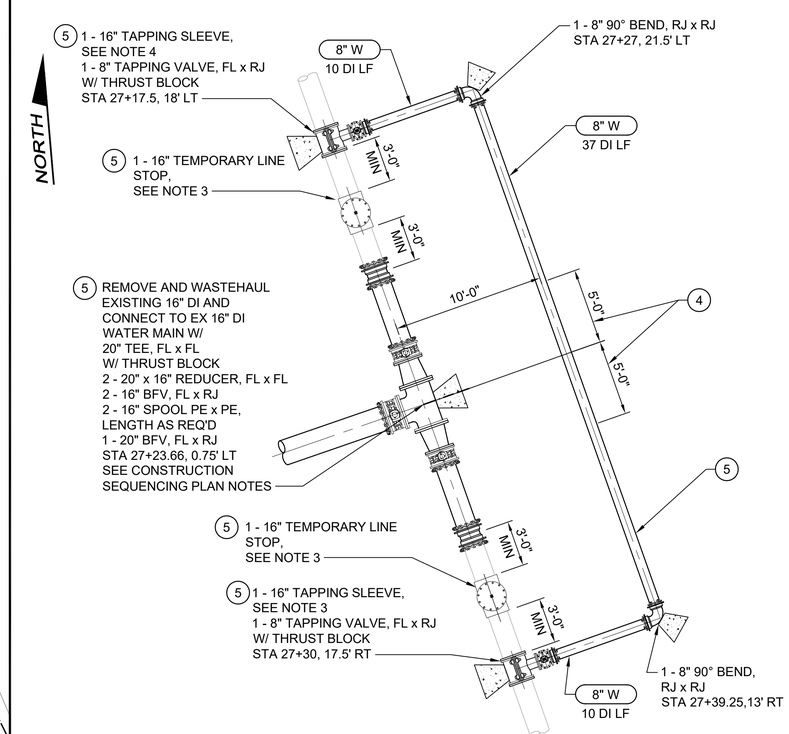

DETAIL 1

SCALE: 1" = 5'-0"

NOTES:

1. INSTALL NEW D.I. WATER MAIN CL52 PER PUD STANDARD DETAILS 801, 802, 803, AND DETAIL 1 SHEET C-6 . INSTALL RESTRAINED JOINTS AND FIELD-LOK GASKETS PER PUD STANDARDS AND SPECIFICATIONS GENERAL NOTE 14.
2. CONTRACTOR SHALL HAVE PUD CREWS ONSITE TO RESTRAIN UTILITY POLES AS NEEDED FOR WATER MAIN INSTALLATION.
3. EDGE OF TAPPING SLEEVES AND LINE STOP SLEEVES SHALL BE MINIMUM 2' CLEAR FROM EXISTING PIPE JOINTS. ADJUST SLEEVE LOCATIONS AS REQUIRED. CONTRACTOR SHALL POTHOLE OR EXPOSE EXISTING 16" WATER MAIN TO DETERMINE LOCATIONS OF EXISTING PIPE JOINTS.

CONSTRUCTION NOTES:

1. DRIVEWAY RESTORATION PER SECTION 3.1.10 OF THE PUD STANDARDS AND SPECIFICATIONS.
2. TRENCH PATCH EXISTING PAVEMENT PER DETAIL 2/C-6. INSTALL 2" MIN HALF WIDTH OVERLAY PER SNOHOMISH COUNTY ENGINEERING AND DEVELOPMENT DESIGN STANDARDS SECTION 8-05.C
3. ALL DISTURBED PERVIOUS SURFACES SHALL BE RESTORED WITH A 6-INCH LAYER OF T5.13 SOIL PER SNOHOMISH COUNTY DRAINAGE MANUAL, VOLUME V RUNOFF TREATMENT BMP'S.
4. BACKFILL WATER MAIN TRENCH WITH CDF. POLYWRAP PIPE PRIOR TO PLACEMENT OF CDF. ENSURE NO PIPE JOINTS ARE LOCATED IN CDF BACKFILL AREA.
5. 8" BYPASS LINE, INCLUDING 16" INSERTION VALVES SHALL BE INSTALLED, TESTED, DISINFECTED, AND OPERATIONAL PRIOR TO CUTTING IN 20" TEE.

CONSTRUCTION SEQUENCING PLAN NOTES:

1. THE FOLLOWING SEQUENCING PLAN IS PROVIDED FOR REFERENCE ONLY. CONTRACTOR SHALL SUBMIT CONSTRUCTION SEQUENCING AND TESTING PLAN PRIOR TO STARTING WORK. SEE SPECIFICATIONS FOR ADDITIONAL REQUIREMENTS.
   - A. POTHOLE AND HOT TAPE EXISTING MAINS PRIOR TO CONFIRMING EXISTING MAIN DEPTH, DIAMETER, MATERIAL, AND PIPE THICKNESS CLASS. REPORT ANY DISCREPANCIES TO OWNER.
   - B. INSTALL, TEST, AND DISINFECT 8-INCH BYPASS LINE.
   - C. INSTALL, TEST, AND DISINFECT 8-INCH TAPPING TEE AND VALVES.
   - D. CONNECT BYPASS LINE TO 8-INCH TAPPING TEES.
   - E. COORDINATE WITH OWNER TO PUT 8-INCH BYPASS LINE IN SERVICE TO PROVIDE CONTINUAL SERVICE TO BURN ROAD.
   - F. INSTALL AND TEST INSERTION VALVES.
   - G. CLOSE INSERTION VALVES.
   - H. REMOVE EXISTING 16" DI WATER MAIN AND CONNECT TO EXISTING SYSTEM AS SHOWN.
   - I. INSTALL, TEST, AND DISINFECT NEW 20-INCH WATER MAIN ALONG 150TH ST NE AND ON SITE.
   - J. ONCE NEW WATER MAINS ARE ACCEPTED BY THE OWNER, MAKE FINAL CONNECTION TO EXISTING 16" MAIN IN BURN ROAD.

Call 48 Hours Before You Dig
1-800-424-5555
UNDERGROUND SERVICE

No.	DATE	REVISION	APPR.
	MAY 2025	ISSUED FOR PERMIT	

SNOHOMISH COUNTY PUD
PUBLIC UTILITY DISTRICT NO. 1
3301 OLD HARTFORD ROAD, LAKE STEVENS
WASHINGTON 98258 (425) 397-3000
MAILING ADDRESS: P.O. BOX 1107,
EVERETT, WASHINGTON 98206

BURN ROAD RESERVOIR WATER PLANS

MADISON TAYLOR MCCOSH
STATE OF WASHINGTON
50123392
REGISTERED PROFESSIONAL ENGINEER
05/21/2025

DATE	May 2025
DESIGNED	MTM
DRAWN	PLS
CHECKED	CGT
SCALE	

WO# 100099341

WE–	965
DWG #	C-3
SHEET	9
OF	36

Path: S:\Cad\Snohomish PUD\23-10882 Burn Rd Res\d Filename: P23-10882_C-2-3 Plot date: May 21, 2025-04:40:52pm CAD User: abradley.
Xref Filename: | X23-10882_Ex Topo | X23-10882_TB | X23-10882_Ex Prof | Tailich | X23-10882_Ex Prop-RW | X23-10882_Prop Site | X23-10882_Prop Util | X23-10882_Dwg Layout | McCrosky | X23-10882_Prop Grad | Rogers | Stevens | Gibson | Willdhood | Gillespie | X23-10882_Ex Grad | Dahl |

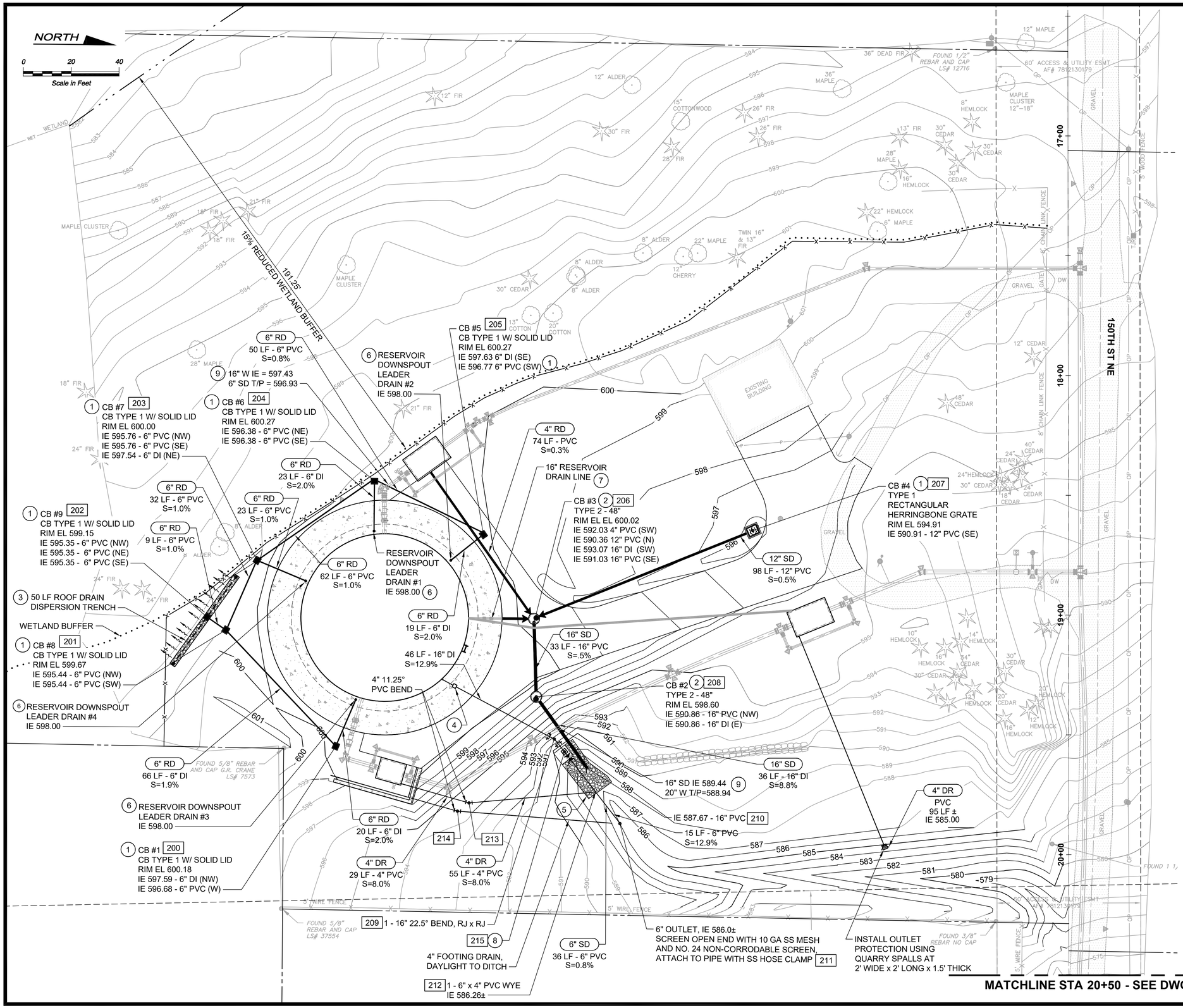

NOTES:

1. SEE DWG C-2 FOR WATER PLAN. SEE DWG C-5 FOR GRADING AND PAVING PLAN.
2. CATCH BASIN INSERTS PER DETAIL 3/EC-3 SHALL BE INSTALLED IN ALL NEW CATCH BASINS.
3. FOR GRADING CONTROL POINTS STARTING WITH NUMBER 300, SEE DWG C-5.
4. FOR PAVING CONTROL POINTS STARTING WITH NUMBER 400, SEE DWG C-5.
5. FOR FENCE CONTROL POINTS STARTING WITH NUMBER 500, SEE DWG C-5.

CONSTRUCTION NOTES:

1. INSTALL CB TYPE 1 PER WSDOT STANDARD PLAN B-05.20-00 WITH FRAME PER WSDOT STANDARD PLAN B-30.10-03. PROVIDE LID TYPE AS NOTED ON THE PLANS.
   a. SOLID LID PER WSDOT STANDARD PLAN B-30.20-04.
   b. RECTANGULAR HERRINGBONE GRATE PER WSDOT STANDARD PLAN B-30.50-03.
2. INSTALL CB TYPE 2 PER WSDOT STANDARD PLAN B-10.20-00 WITH PAMREX 36" LOCKING DI FRAME AND COVER PRODUCT NO 621132.
3. INSTALL ROOF DRAIN DISPERSION TRENCH PER DETAIL 1/C-7.
4. STEEL INSULATION COUPLING, SEE SECTION C/R-6
5. INSTALL ROCK OUTFALL PROTECTION PER DETAIL 2/C-7.
6. INSTALL RESERVOIR DOWNSPOUT LEADER DRAIN PER DETAIL 3/R-7.
7. INSTALL 16" RESERVOIR DRAIN LINE PER DETAIL 1/R-5. INSTALL INLINE CHECK VALVE PRIOR TO DISCHARGE TO CATCH BASIN.
8. INSTALL RESERVOIR OVERFLOW DISCHARGE PER DETAIL 4/C-7.
9. PROVIDE 6" MINIMUM VERTICAL CLEARANCE WITH ETHAFOAM PAD.
10. INSTALL SPLIT RAIL FENCE PER DETAIL 5/C-6.
11. INSTALL HMA PER DETAIL 3/C-6.
12. DRIVEWAY RESTORATION PER SECTION 3.1.10 OF THE PUD STANDARDS AND SPECIFICATIONS.

COORDINATE CONTROL

NO.	NORTHING	EASTING
200	415191.40	1341511.17
201	415145.03	1341463.05
202	415137.15	1341457.73
203	415157.86	1341433.89
204	415206.62	1341399.19
205	415252.18	1341422.34
206	415273.67	1341457.29
207	415364.66	1341419.66
208	415274.77	1341489.8
209	415282.56	1341507.4
210	415296.21	1341519.16
211	415310.34	1341542.39
212	415300.02	1341529.33
213	415247.19	1341534.35
214	415242.4	1341537.82
215	415286.96	1341512.77

811
Call 48 Hours Before You Dig
1-800-424-5555
UNDERGROUND SERVICE

No.	DATE	REVISION	APPR.
	MAY 2025	ISSUED FOR PERMIT	

SNOHOMISH COUNTY PUD
PUBLIC UTILITY DISTRICT NO. 1
3301 OLD HARTFORD ROAD, LAKE STEVENS
WASHINGTON 98258 (425) 397-3000
MAILING ADDRESS: P.O. BOX 1107,
EVERETT, WASHINGTON 98206

BURN ROAD RESERVOIR
RESERVOIR SITE DRAINAGE PLAN

STATE OF WASHINGTON
MADISON TAYLOR MCCROSKEY
30123392
REGISTERED PROFESSIONAL ENGINEER
05/21/2025

DATE	May 2025
DESIGNED	MTM
DRAWN	PLS
CHECKED	CGT
SCALE	

WO# 100099341

WE–	965
DWG #	C-4
SHEET	10
OF	36

Path: S:\Cad\Snohomish PUD\23-10882 Burn Rd Resvd Filename: P23-10882_C-4 Plot date: May 21, 2025-04:43:31pm CAD User: abradley
Xref Filename: | X23-10882_TB | McCrosky | X23-10882_Prop Grad | X23-10882_Ex Topo | X23-10882_Prop Site | X23-10882_Prop Util | X23-10882_Ex Prof | X23-10882_Ex Prop-RW | Taitch | Rogers | Stevens | Gibson | Wildhood | X23-10882_Ex Grad | Gillespie | Dahl |

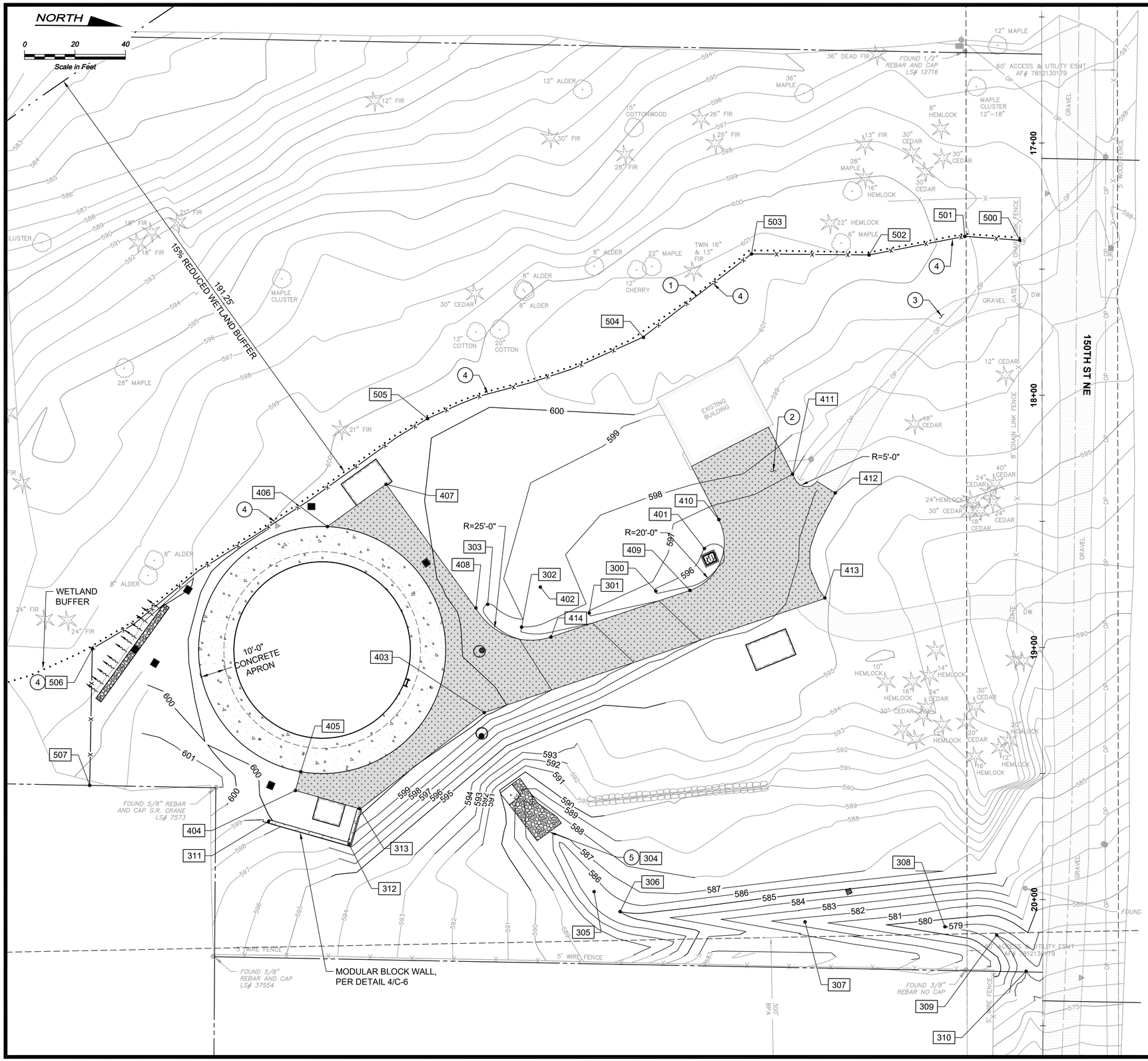

NOTES:

1. SEE DWG C-2 FOR WATER PLAN. SEE DWG C-4 FOR DRAINAGE PLAN.

CONSTRUCTION NOTES:

1. INSTALL SPLIT RAIL FENCE PER DETAIL 5/C-6.
2. INSTALL HMA PER DETAIL 3/C-6.
3. DRIVEWAY RESTORATION PER SECTION 3.1.10 OF THE PUD STANDARDS AND SPECIFICATIONS.
4. INSTALL CAPA SIGN PER DETAIL 5/C-6. MIN SPACING 100 FT.

COORDINATE CONTROL - SPLIT RAIL FENCE

NO.	NORTHING	EASTING
500	415486.41	1341292.39
501	415464.61	1341291.04
502	415426.72	1341298.75
503	415380.13	1341298.75
504	415337.58	1341332.23
505	415252.28	1341365.17
506	415120.17	1341457.57
507	415119.63	1341511.77

COORDINATE CONTROL - PAVING

NO.	NORTHING	EASTING	ELEVATION	DESCRIPTION
401	415362.49	1341415.74	N/A	RADIUS CENTER
402	415297.68	1341431.67	N/A	RADIUS CENTER
403	415275.76	1341484.54	600.5	PAVEMENT CORNER
404	415201.20	1341513.08	600.35	PAVEMENT CORNER
405	415203.25	1341505.62	600.36	PAVEMENT CORNER
406	415212.95	1341408.32	600.36	PAVEMENT CORNER
407	415236.06	1341391.33	601.00	PAVEMENT CORNER
408	415272.10	1341440.07	599.52	EDGE OF PAVEMENT
409	415356.88	1341432.37	596.50	EDGE OF PAVEMENT
410	415368.07	1341404.20	596.25	EDGE OF PAVEMENT
411	415397.17	1341385.91	597.00	EDGE OF PAVEMENT
412	415414.13	1341393.24	595.50	PAVEMENT CORNER
413	415301.96	1341451.33	595.10	PAVEMENT CORNER
414	415301.96	1341451.33	598.65	EDGE OF PAVEMENT

COORDINATE CONTROL - GRADING

NO.	NORTHING	EASTING	ELEVATION	DESCRIPTION
300	415343.35	1341432.78	596.00	BIOFILTRATION SWALE CL
301	415317.04	1341441.69	597.00	BIOFILTRATION SWALE CL
302	415290.12	1341448.43	598.00	BIOFILTRATION SWALE CL
303	415276.75	1341438.57	599.00	BIOFILTRATION SWALE CL
304	415303.23	1341527.69	583.25±	SWALE CL
305	415319.94	1341552.15	585.65±	SWALE CL
306	415330.31	1341559.98	585.00±	SWALE CL
307	415403.66	1341563.41	581.40±	SWALE CL
308	415459.11	1341564.84	579.00±	SWALE CL
309	415479.71	1341567.95	578.05±	SWALE CL
310	415491.44	1341582.21	MATCH EX	CONNECT TO EX DITCH
311	415190.65	1341525.44	600.6	TOP OF WALL
312	415222.64	1341534.16	600.6	TOP OF WALL
313	415226.66	1341520.07	600.6	TOP OF WALL

Call 48 Hours Before You Dig
1-800-424-5555
UNDERGROUND SERVICE

No.	DATE	REVISION	APPR.
	MAY 2025	ISSUED FOR PERMIT	

SNOHOMISH COUNTY PUD
PUBLIC UTILITY DISTRICT NO. 1
3301 OLD HARTFORD ROAD, LAKE STEVENS
WASHINGTON 98258 (425) 397-3000
MAILING ADDRESS: P.O. BOX 1107,
EVERETT, WASHINGTON 98206

BURN ROAD RESERVOIR RESERVOIR SITE GRADING AND PAVING PLAN

MADISON TAYLOR MCCRAY
STATE OF WASHINGTON
50128392
REGISTERED PROFESSIONAL ENGINEER
05/21/2025

DATE	May 2025
DESIGNED	MTM
DRAWN	PLS
CHECKED	CGT
SCALE	

WO# 100099341

WE– 965
DWG # C-5
SHEET 11
OF 36

Path: S:\Cad\Snohomish PUD\23-10882 Burn Rd Resv\d Filename: P23-10882_C-5 Plot date: May 21, 2025-04:44:22pm CAD User: abradley
Xref Filename: | X23-10882_TB | McCrosky | X23-10882_Prop Grad | X23-10882_Ex Topo | X23-10882_Prop Site | X23-10882_Prop Util | X23-10882_Ex Prof | X23-10882_Ex Prop-RW | X23-10882_Ex Grad | Talich | Rogers | Stevens | Gibson | Wildhood | Gillespie | Dahl |

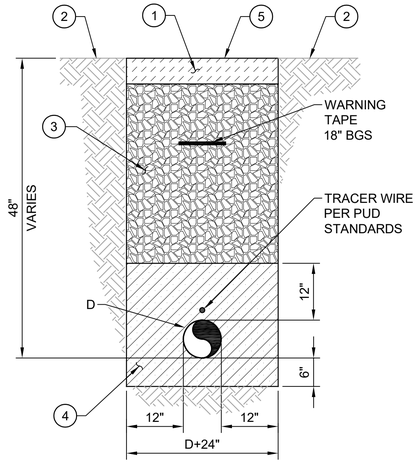

CONSTRUCTION NOTES:

1. INSTALL 6-INCH LAYER OF T5.13 SOIL PER SNOHOMISH COUNTY DRAINAGE MANUAL, VOLUME V RUNOFF TREATMENT BMP'S IN VEGETATED TRENCH AREAS.
2. EXISTING UNDISTURBED SOIL.
3. NATIVE MATERIAL, BANK RUN GRAVEL, CSTC, OR CDF.
4. PIPE BEDDING, CSTC.
5. HYDROSEED, SEE TABLE 4.4, SHEET C-7 FOR SEED MIX.

TYPICAL TRENCH SECTION IN VEGETATED AREAS

DETAIL 1

NTS TYP

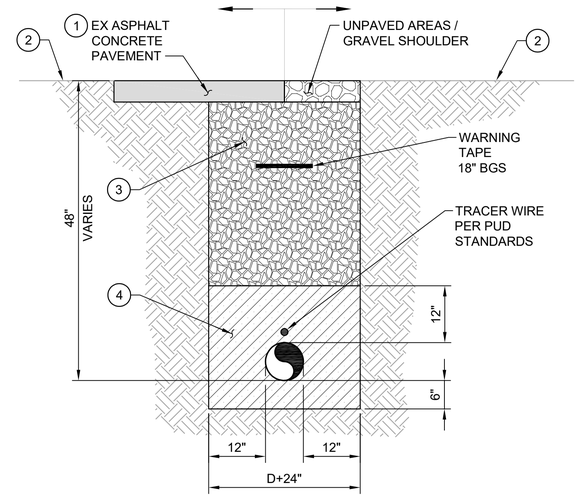

CONSTRUCTION NOTES:

1. HMA, 6" COMPACTED DEPTH OR MATCH EXISTING, WHICHEVER IS GREATER. NEAT LINE CUT EXISTING ASPHALT. TACK AND SEAL EDGES.
2. EXISTING UNDISTURBED SOIL.
3. NATIVE MATERIAL, BANK RUN GRAVEL, CSTC OR CONTROL DENSITY FILL CDF.
4. PIPE BEDDING, CSTC.

TYPICAL TRENCH SECTION IN IMPERVIOUS AREA

DETAIL 2

NTS TYP

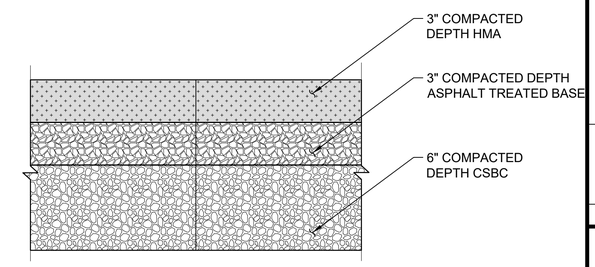

HMA PAVEMENT

DETAIL 3

NTS TYP

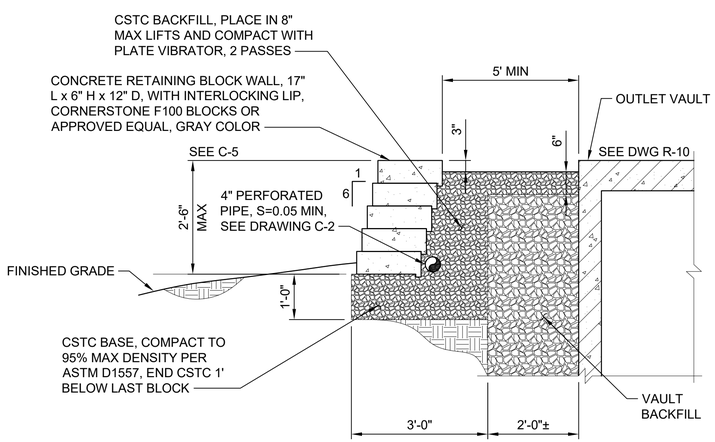

NOTES:

1. COMPACT BASE SUBGRADE. EXCAVATE SOFT AREAS AND BACKFILL WITH CSBC.
2. INSTALL WALL BLOCK PER MANUFACTURER'S RECOMMENDATION.

CONCRETE WALL BLOCK

DETAIL 4

NTS C-2

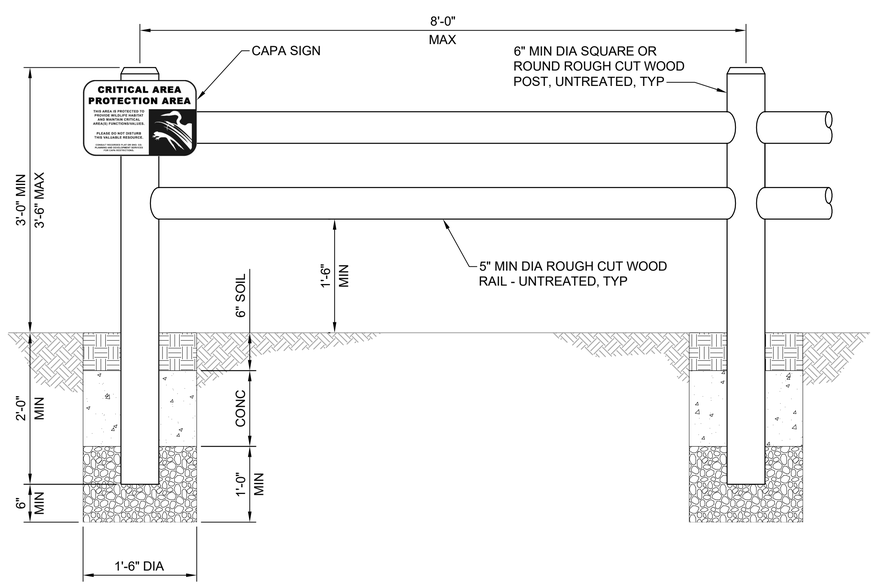

SPLIT RAIL FENCE AND SIGNAGE

DETAIL 5

NTS C-2

NOTES:

1. SIGN SHALL BE ALUMINUM WITH WHITE REFLECTIVE BACKGROUND.
2. COLOR FOR FONT, IMAGE, AND BORDER:
   GREEN C= 79 M-33 Y=84 K=21 OR BLACK C=80 M=70 Y=70 K=100
3. CAPA SIGNS SHALL BE PLACED NO GREATER THAN 100 FEET APART ALONG THE SPLIT RAIL FENCE.
4. ALL SIGNS MUST BE SECURE AND PERMANENT. INSTALL WITH MINIMUM OF TWO GALVANIZED OR STAINLESS STEEL WOOD LAG BOLTS.

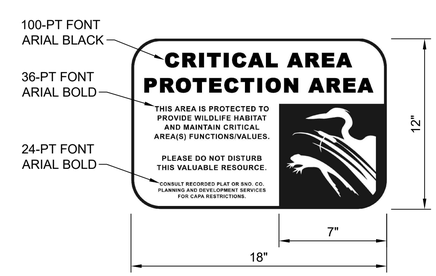

CAPA SIGN

Call 48 Hours Before You Dig

1-800-424-5555

UNDERGROUND SERVICE

No.	DATE	REVISION	APPR.
	MAY 2025	ISSUED FOR PERMIT	

SNOHOMISH COUNTY PUD
PUBLIC UTILITY DISTRICT NO. 1
3301 OLD HARTFORD ROAD, LAKE STEVENS
WASHINGTON 98258 (425) 397-3000
MAILING ADDRESS: P.O. BOX 1107,
EVERETT, WASHINGTON 98206

BURN ROAD RESERVOIR

CIVIL DETAILS
1 OF 2

CARLA G. TAICH
STATE OF WASHINGTON
37426
REGISTERED PROFESSIONAL ENGINEER
05/21/2025

DATE	May 2025
DESIGNED	MTM
DRAWN	EDM
CHECKED	CGT
SCALE	AS SHOWN

WO# 100099341

WE–	965
DWG #	C-6
SHEET	12
OF	36

Path: S:\Cad\Snohomish PUD\23-10882 Burn Rd Res\d Filename: P23-10882_C-6 Plot date: May 21, 2025-04:45:05pm CAD User: abradley,
Xref Filename: | X23-10882_TB | Taich | X23-10882_Status | Stevens | Rogers | Gibson | McCrosky | Wildhood | Gillespie | Dahl |

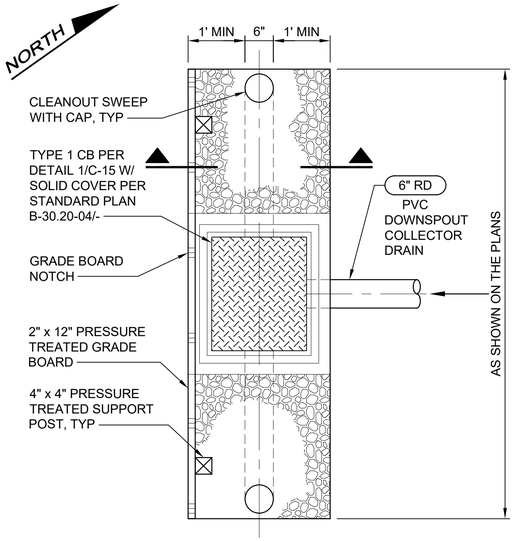

PLAN

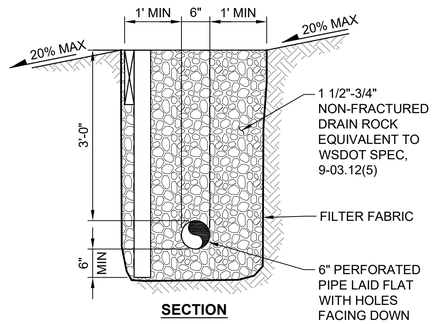

SECTION

NOTES:

1. THIS TRENCH SHALL BE CONSTRUCTED TO PREVENT POINT DISCHARGE AND/OR EROSION.
2. PROVIDE AT LEAST 1'-0" SUMP BELOW PIPE INVERTS IN TYPE 1 CB FOR SEDIMENT ACCUMULATION.
3. TRENCH AND GRADE BOARD SHALL BE LEVEL. ALIGN TO FOLLOW CONTOURS OF SITE.
4. GRADE BOARD SUPPORT POST SPACING AS REQUIRED BY SOIL CONDITIONS.
5. THE END OF EACH PIPE RUN SHALL HAVE AN ACCESSIBLE CLEAN OUT SWEEP. PIPE END SHALL BE VISIBLE.

FLOW DISPERSION TRENCH

DETAIL 1

NTS C-4

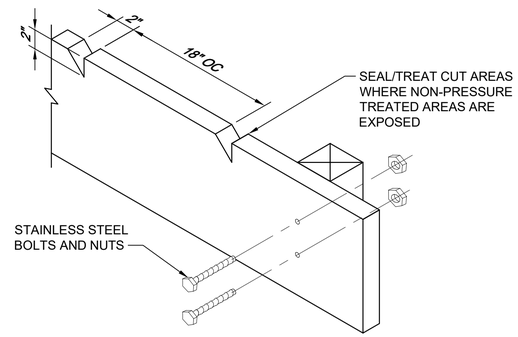

GRADE BOARD WITH NOTCHES

TABLE 4.4*
LOW-GROWING TURF SEED MIX

DESCRIPTION	% WEIGHT	% PURITY	% GERMINATION
DWARF TALL FESCUE (SEVERAL VARIETIES) *FESTUCA ARUNDINACEA VAR*	45	98	90
DWARF PERENNIAL RYE (BARCLAY) *LOLIUM PERENNE VAR BARCLAY*	30	98	90
RED FESCUE *FESTUCA RUBRA*	20	98	90
COLONIAL BENTGRASS *AGROSTIS TENUIS*	5	98	90

REFERENCE: SNOHOMISH COUNTY DRAINAGE MANUAL VOLUME II, TABLE 4.4, JULY 2021.

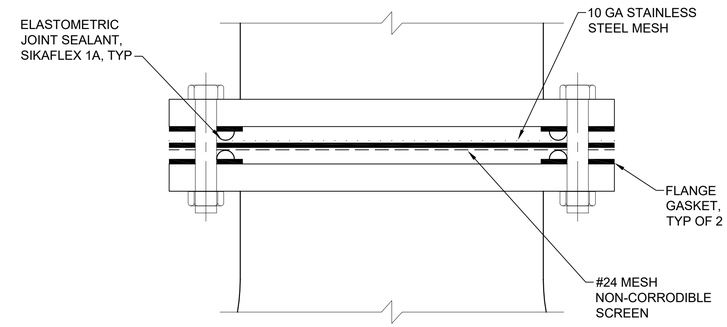

RESERVOIR OVERFLOW DISCHARGE SCREEN

DETAIL 2

SCALE: 3" = 1'-0" TYP

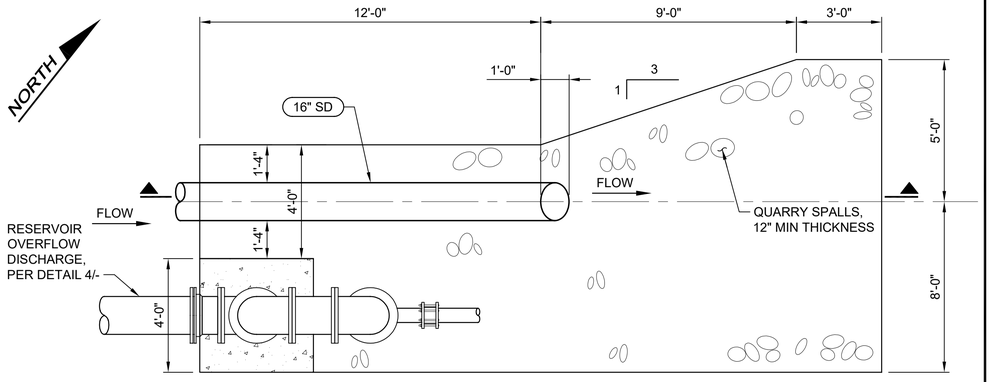

PLAN

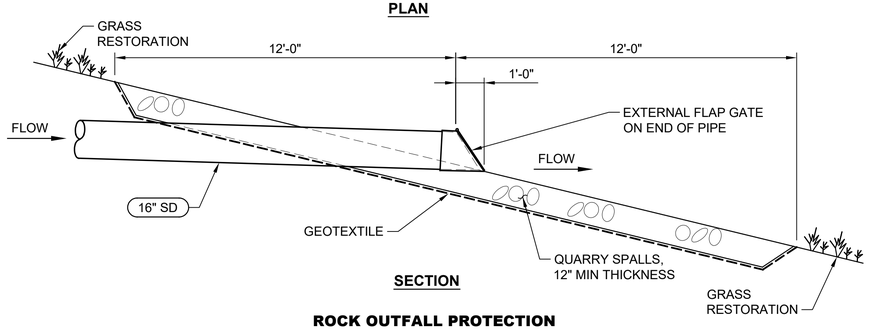

SECTION

ROCK OUTFALL PROTECTION

DETAIL 3

NTS C-2

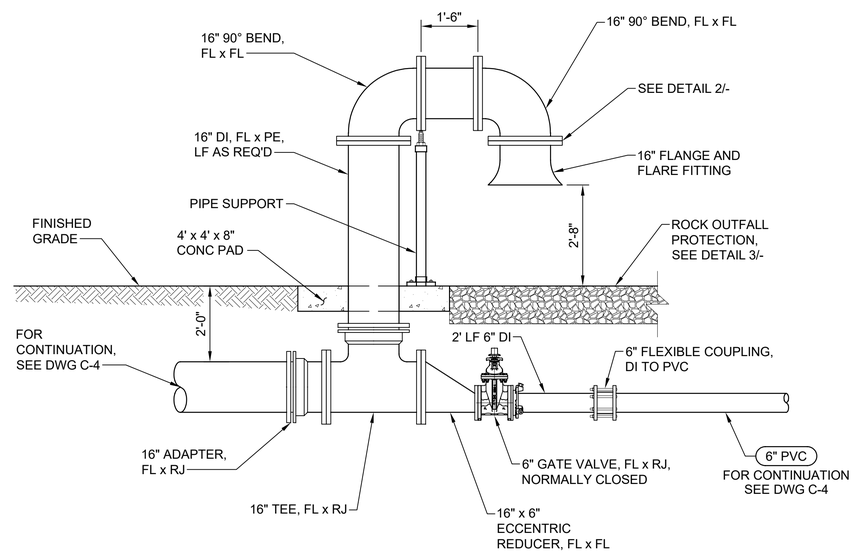

RESERVOIR OVERFLOW DISCHARGE

DETAIL 4

SCALE: 1/2" = 1'-0" TYP

Call 48 Hours Before You Dig

1-800-424-5555
UNDERGROUND SERVICE

No.	DATE	REVISION	APPR.
	MAY 2025	ISSUED FOR PERMIT	

SNOHOMISH COUNTY PUD
PUBLIC UTILITY DISTRICT NO. 1
3301 OLD HARTFORD ROAD, LAKE STEVENS WASHINGTON 98258 (425) 397-3000
MAILING ADDRESS: P.O. BOX 1107, EVERETT, WASHINGTON 98206

BURN ROAD RESERVOIR
CIVIL DETAILS 2 OF 2

CARLA G. TALICH, STATE OF WASHINGTON, 37426, REGISTERED PROFESSIONAL ENGINEER
05/21/2025

DATE	May 2025
DESIGNED	MTM
DRAWN	EDM
CHECKED	CGT
SCALE	AS SHOWN

WO# 100099341

WE–	965
DWG #	C-7
SHEET	11
OF	36

Path: S:\Cad\Snohomish PUD\23-10882 Burn Rd Res\Vd Filename: P23-10882_C-7 Plot date: May 21, 2025-04:45:40pm CAD User: abradley.
Xref Filename: | X23-10882_TB | Talich | X23-10882_Status | Stevens | Rogers | Gibson | McCrosky | Wildhood | Gillespie | Dahl |

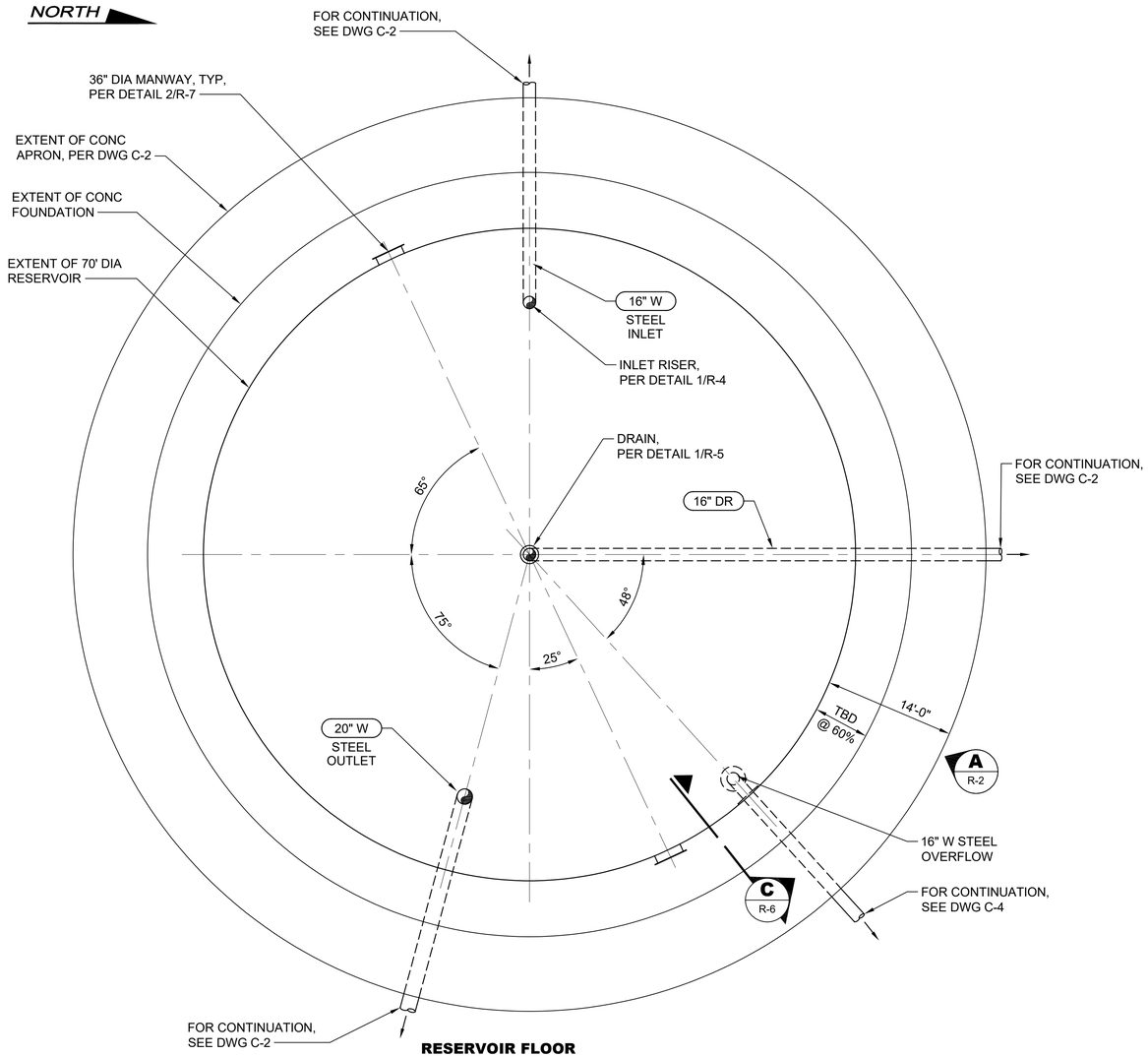

RESERVOIR FLOOR PLAN 1 C-2

SCALE: 1/8" = 1'-0"

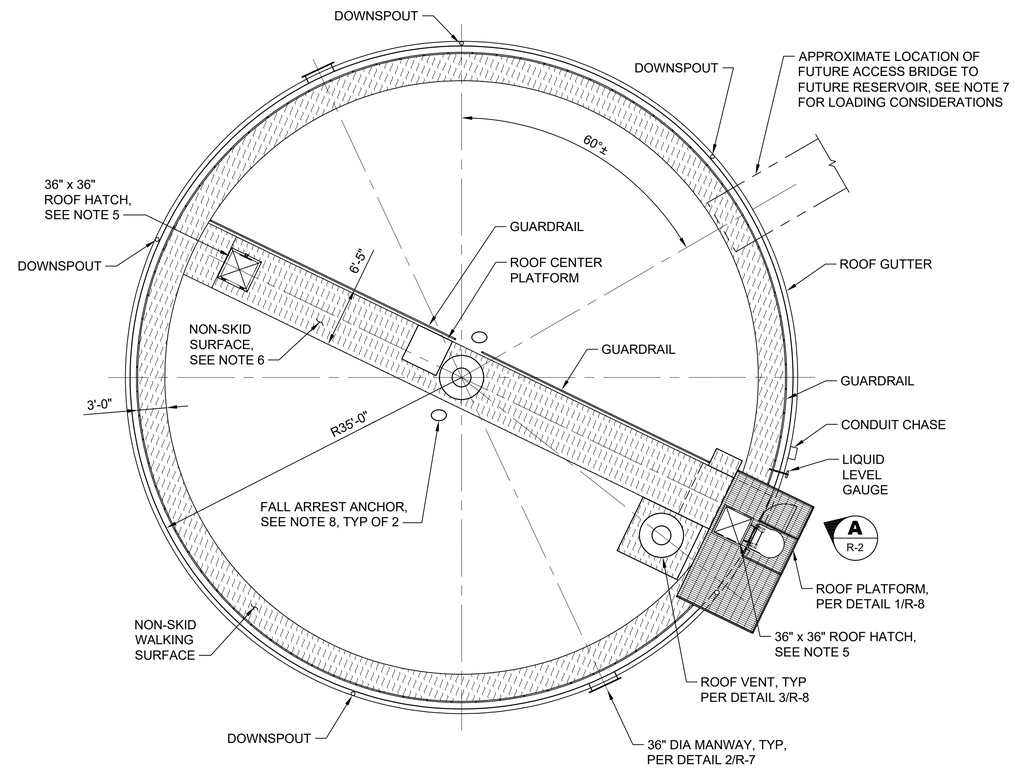

RESERVOIR ROOF PLAN 2 C-2

SCALE: 1/8" = 1'-0"

NOTES:

1. THE DESIGN OF THE RESERVOIR AND APPURTENANCES SHALL MEET THE REQUIREMENTS OF THE AWWA D100 STANDARD.
2. ALL SIZES OF MATERIALS AND WELDING AS SHOWN ARE MINIMUM REQUIREMENTS. MATERIAL SIZES AND WELDS REQUIRED FOR THE RESERVOIR AND APPURTENANCES SHALL BE PROVIDED BY THE RESERVOIR DESIGNER.
3. REFER TO STRUCTURAL DRAWINGS FOR DESIGN LOADS APPLICABLE TO THE RESERVOIR AND RESERVOIR FOUNDATION.
4. REFER TO SPECIFICATIONS FOR APPLICABLE STANDARDS, DESIGN REQUIREMENTS, AND MATERIAL.
5. ROOF HATCH SHALL BE INSTALLED WITH A GASKET PER THE SPECIFICATIONS.
6. NON-SKID WALKING SURFACE SHALL BE PROVIDED AS SHOWN ON THE PLANS AND DESCRIBED IN SECTION 09 97 10 OF THE SPECIFICATIONS.
7. DESIGN RESERVOIR FOR GRAVITY AND SEISMIC LOADING FOR A FUTURE BRIDGE SUPPORT. PREPARE ROOF SHELL FOR POINT LOADS FROM BRIDGE CONNECTIONS. ASSUME FUTURE BRIDGE WILL BE 3 FT WIDE AND APPROXIMATELY 60 FT LONG. IT SHALL INCLUDE METAL GRADING AND HANDRAILS. ASSUME LIVE LOADING TO BE 50PSF.
8. FALL ARREST ANCHORS SHALL HAVE 12 INCHES TALL POSTS AND BE OSHA COMPLIANT FOR 5000 LBS. RESTRAINT. PROVIDE REPAD REINFORCEMENT AS REQUIRED.

Call 48 Hours Before You Dig
1-800-424-5555
UNDERGROUND SERVICE

No.	DATE	REVISION	APPR.
	MAY 2025	ISSUED FOR PERMIT	

SNOHOMISH COUNTY PUD
PUBLIC UTILITY DISTRICT NO. 1
3301 OLD HARTFORD ROAD, LAKE STEVENS
WASHINGTON 98258 (425) 397-3000
MAILING ADDRESS: P.O. BOX 1107,
EVERETT, WASHINGTON 98206

BURN ROAD RESERVOIR
RESERVOIR FLOOR AND ROOF PLANS

LANCE D. STEVENS, STATE OF WASHINGTON, 45274, REGISTERED PROFESSIONAL ENGINEER
05/21/2025

DATE	May 2025
DESIGNED	MTM
DRAWN	EDM
CHECKED	CGT
SCALE	AS SHOWN

WO# 100099341

WE–	965
DWG #	R-1
SHEET	14
OF	37

Path: S:\Cad\Snohomish PUD\23-10882 Burn Rd Res\d Filename: P23-10882_R-1 Plot date: May 21, 2025-04:59:38pm CAD User: abradley,
Xref Filename: | X23-10882_TB | Tailch | X23-10882_Status | Stevens | X23-10882_Prop Rsvr | Rogers | Gibson | McCrosky | Wildhood | Gillespie | Dahl |

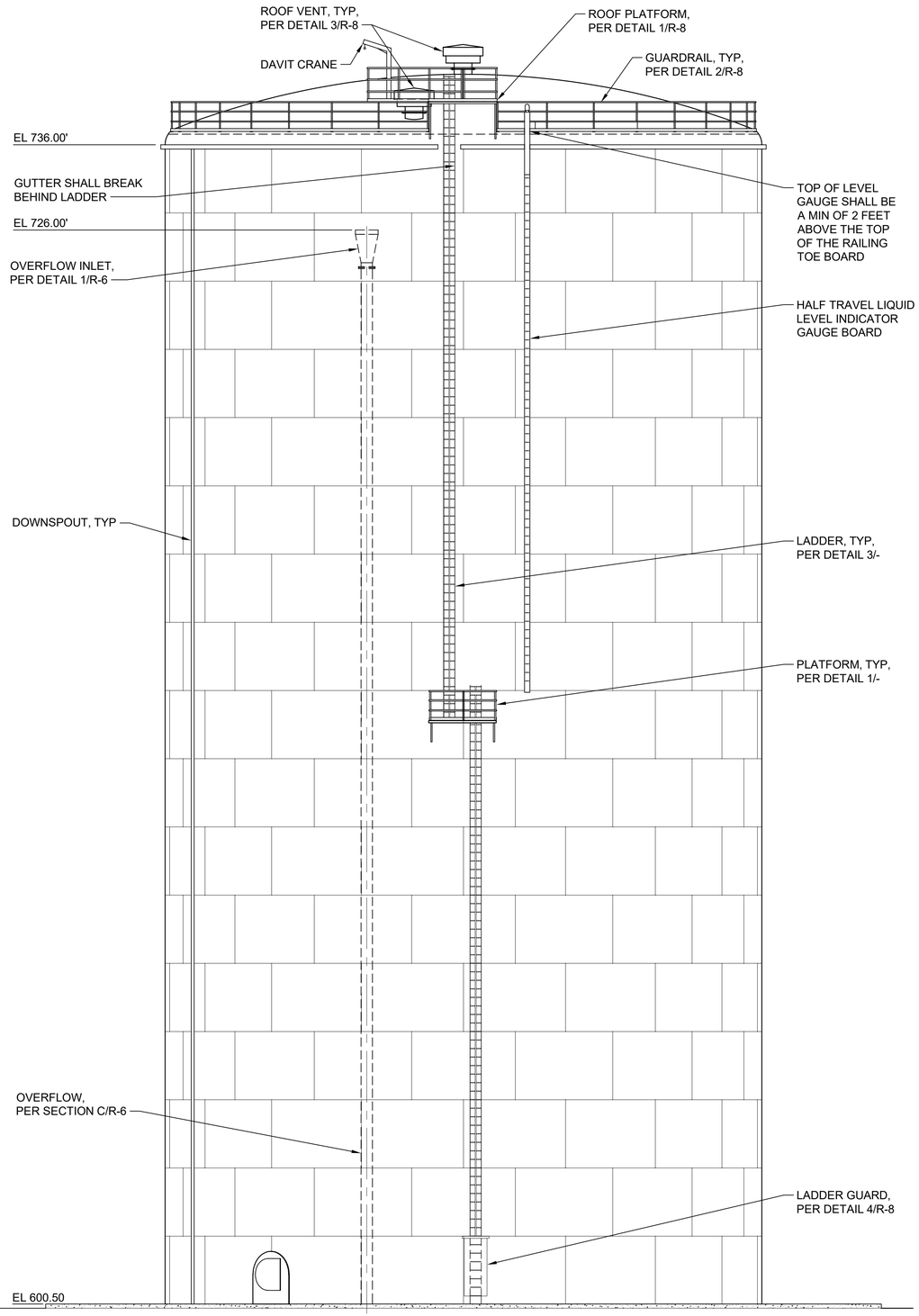

ELEVATION A
SCALE: 3/8" = 1'-0" R-1

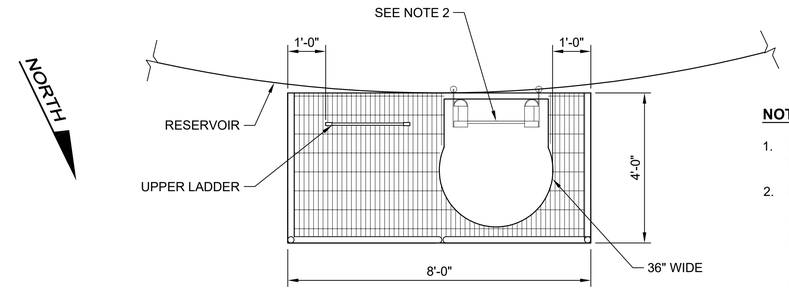

PLAN

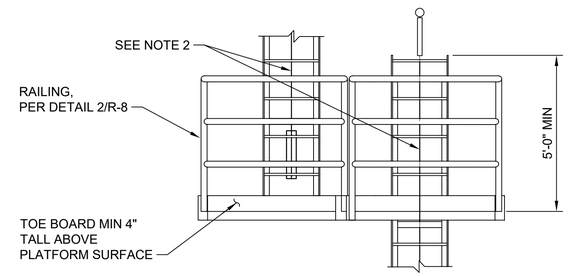

ELEVATION

PLATFORM
DETAIL 1
NTS TYP

NOTES:

1. LADDERS SHALL BE INSTALLED AT A PITCH OF 90° FROM THE HORIZONTAL.
2. PROVIDE LADDER SAFETY DEVICE WITH CABLE VERTICAL SAFETY SYSTEM COMPATIBLE WITH 3M DBI-SALA LAD-SAF DETACHABLE CABLE TRAVELER 6160030. SAFETY SYSTEM SHALL INCLUDE D-RING ANCHORAGE ASSEMBLY AT TOP OF EACH LADDER RUN.

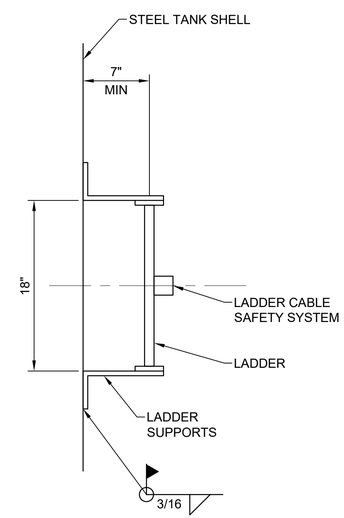

EXTERIOR LADDER
DETAIL 2
NTS TYP

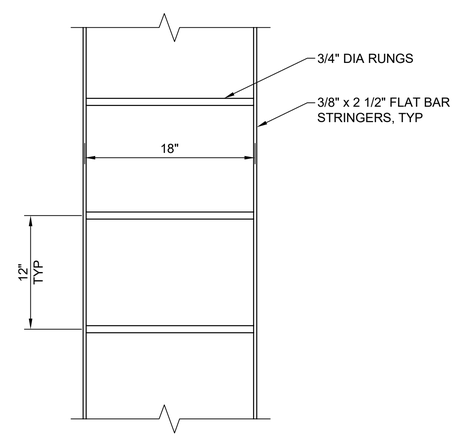

LADDER
DETAIL 3
NTS TYP

Call 48 Hours Before You Dig
1-800-424-5555
UNDERGROUND SERVICE

No.	DATE	REVISION	APPR.
	MAY 2025	ISSUED FOR PERMIT	

SNOHOMISH COUNTY PUD
PUBLIC UTILITY DISTRICT NO. 1
3301 OLD HARTFORD ROAD, LAKE STEVENS
WASHINGTON 98258 (425) 397-3000
MAILING ADDRESS: P.O. BOX 1107,
EVERETT, WASHINGTON 98206

BURN ROAD RESERVOIR
RESERVOIR ELEVATION AND LADDER DETAILS

LANCE D. STEVENS
STATE OF WASHINGTON
43574
REGISTERED PROFESSIONAL ENGINEER
05/21/2025

DATE	May 2025
DESIGNED	MTM
DRAWN	EDM
CHECKED	CGT
SCALE	AS SHOWN

WO# 100099341

WE–	965
DWG #	R-2
SHEET	15
OF	37

Path: S:\Cad\Snohomish PUD\23-10882 Burn Rd Resv\d Filename: P23-10882_R-2 Plot date: May 21, 2025-05:00:14pm CAD User: abradley.
Xref Filename: | X23-10882_TB | Talich | X23-10882_Status | Stevens | X23-10882_Prop Rsvr | Rogers | Gibson | McCrosky | Wildhood | Gillespie | Dahl |

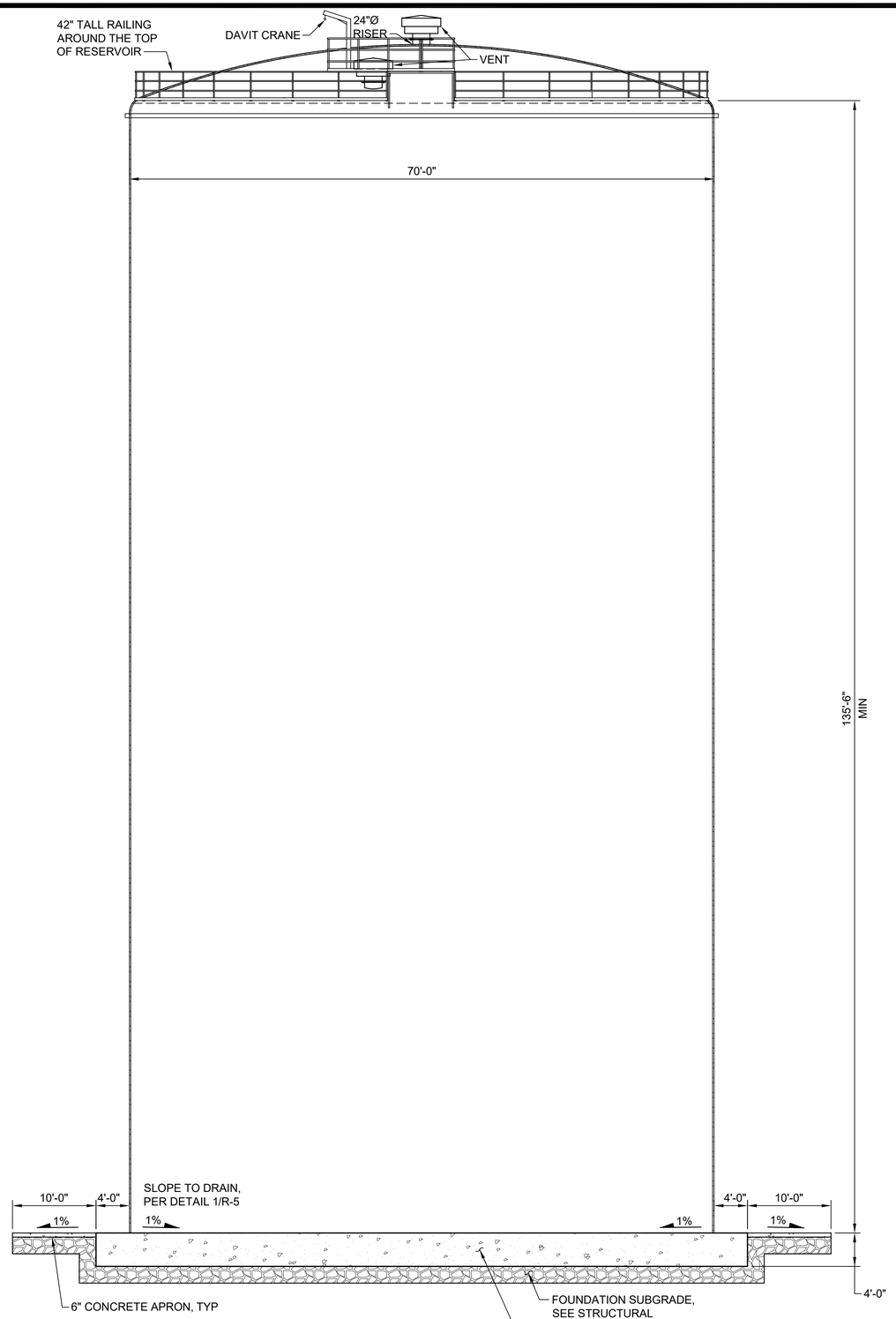

RESERVOIR
SECTION **A**
SCALE: 1/8" = 1'-0" R-1

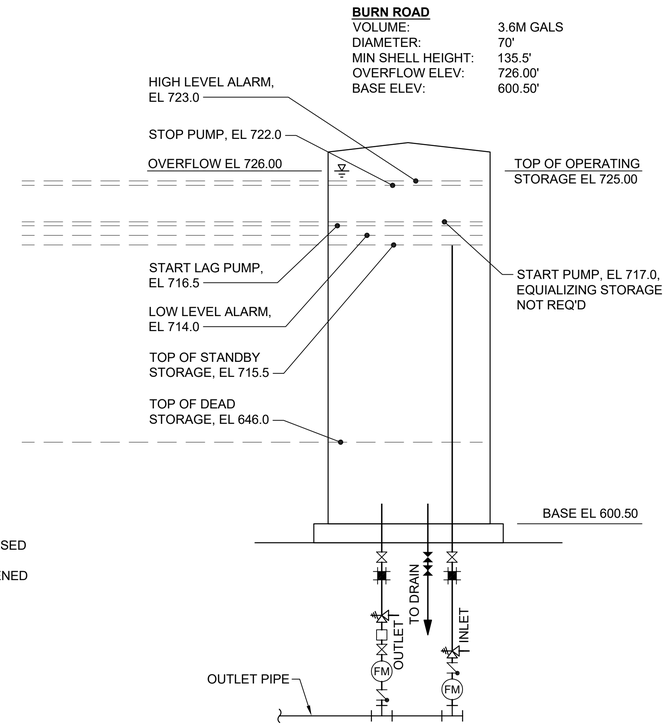

LEGEND

- FLEXIBLE EXPANSION JOINT
- GATE VALVE, NORMALLY CLOSED
- GATE VALVE, NORMALLY OPENED
- CHECK VALVE
- SEISMIC VALVE
- AIR/VAC VALVE
- FM FLOW METER

RESERVOIR WATER PIPING SCHEMATIC
DETAIL **1**
NTS

No.	DATE	REVISION	APPR.
	MAY 2025	ISSUED FOR PERMIT	

SNOHOMISH COUNTY PUD PUBLIC UTILITY DISTRICT NO. 1
3301 OLD HARTFORD ROAD, LAKE STEVENS WASHINGTON 98258 (425) 397-3000
MAILING ADDRESS: P.O. BOX 1107, EVERETT, WASHINGTON 98206

BURN ROAD RESERVOIR RESERVOIR SECTIONS AND WATER PIPING SCHEMATIC

LANCE D. STEVENS STATE OF WASHINGTON 45274 REGISTERED PROFESSIONAL ENGINEER
05/21/2025

DATE	May 2025
DESIGNED	SJF
DRAWN	SO
CHECKED	
SCALE	N/A

WO# 100099341

WE–	965
DWG #	R-3
SHEET	16
OF	37

Call 48 Hours Before You Dig
1-800-424-5555
UNDERGROUND SERVICE

Path: S:\Cad\Snohomish PUD\23-10882 Burn Rd Res\d Filename: P23-10882_R-3 Plot date: May 21, 2025-05:00:50pm CAD User: abradley.
Xref Filename: | X23-10882_TB | Talich | X23-10882_Status | X23-10882_Prop | Stevens | Wildhood | Gibson | Rogers | McCrosky | Gillespie | Dahl |

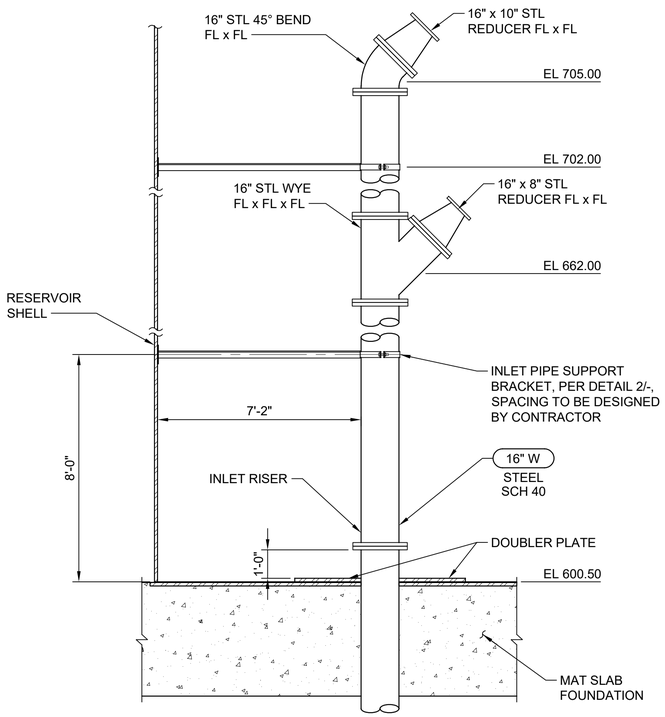

INLET RISER

DETAIL 1

SCALE: 3/8" = 1'-0" R-1

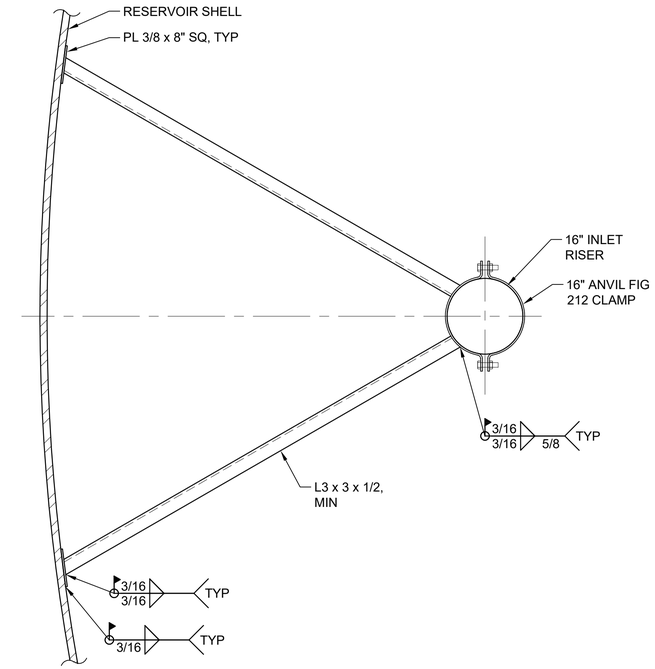

INLET SUPPORT

DETAIL 2

NTS -

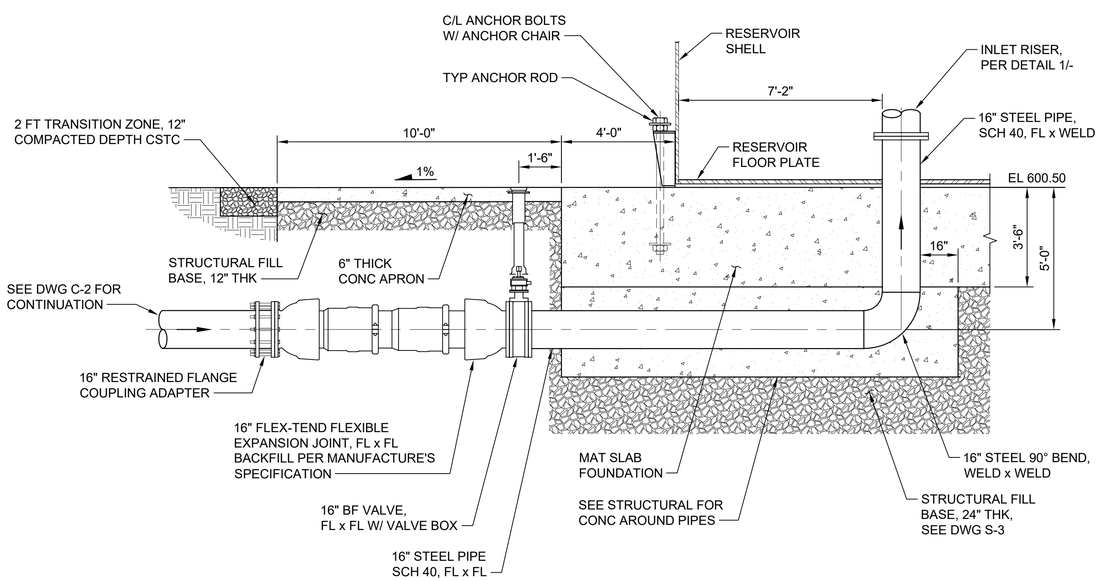

NOTE:

1. INSTALL DIELECTRIC KIT AT STEEL AND DUCTILE IRON PIPE CONNECTIONS.

RESERVOIR INLET

SECTION A

SCALE: 3/8" = 1'-0" C-2

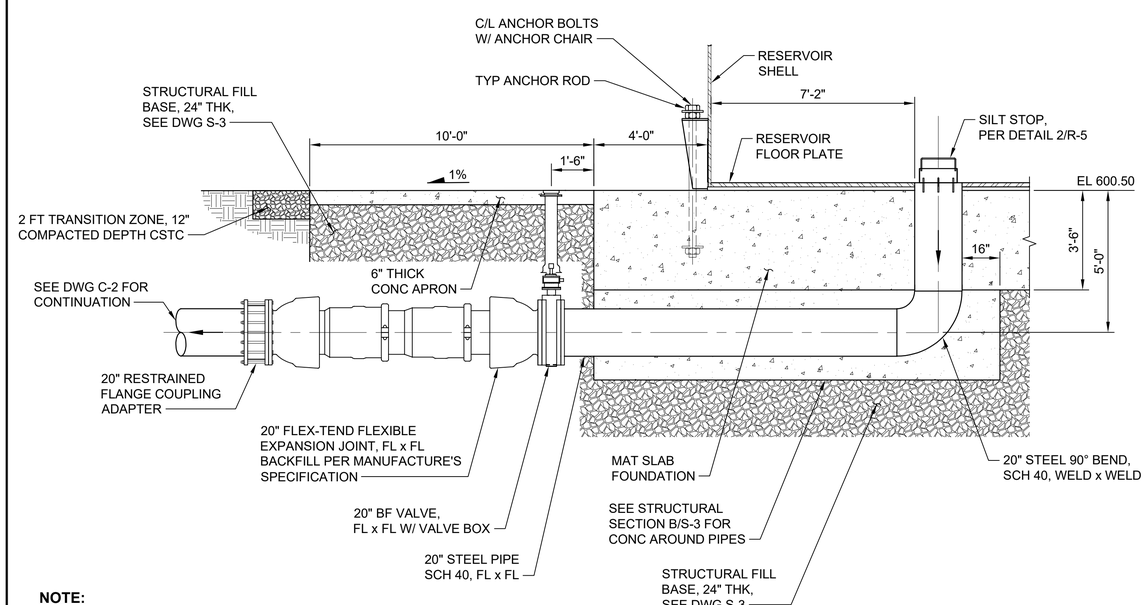

NOTE:

1. INSTALL DIELECTRIC KIT AT STEEL AND DUCTILE IRON PIPE CONNECTIONS.

RESERVOIR OUTLET

SECTION B

SCALE: 3/8" = 1'-0" C-2

Call 48 Hours Before You Dig

1-800-424-5555

UNDERGROUND SERVICE

No.	DATE	REVISION	APPR.
	MAY 2025	ISSUED FOR PERMIT	

SNOHOMISH COUNTY PUD
PUBLIC UTILITY DISTRICT NO. 1
3301 OLD HARTFORD ROAD, LAKE STEVENS
WASHINGTON 98258 (425) 397-3000
MAILING ADDRESS: P.O. BOX 1107,
EVERETT, WASHINGTON 98206

BURN ROAD RESERVOIR
RESERVOIR INLET AND OUTLET PIPING DETAILS AND SECTIONS

JOHN T. GILLESPIE III — STATE OF WASHINGTON — 31993 — REGISTERED PROFESSIONAL ENGINEER

05/21/2025

DATE	May 2025
DESIGNED	MTM
DRAWN	EDM
CHECKED	CGT
SCALE	AS SHOWN

WO# 100099341

WE–	965
DWG #	R-4
SHEET	17
OF	37

Path: S:\Cad\Snohomish PUD\23-10882 Burn Rd Resv\d Filename: P23-10882_R-4 Plot date: May 21, 2025-05:01:24pm CAD User: abradley.
Xref Filename: | X23-10882_TB | Talich | X23-10882_Status | Stevens | Rogers | Gibson | McCrosky | Wildhood | Gillespie | Dahl |

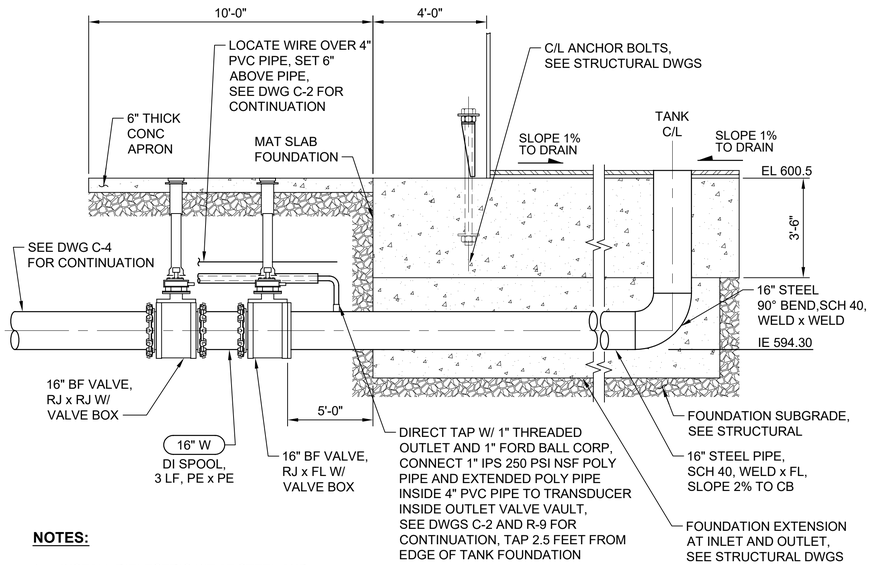

NOTES:

1. INSTALL DIELECTRIC KIT AT STEEL AND DUCTILE IRON PIPE CONNECTIONS.

TANK DRAIN
DETAIL 1
NTS C-2

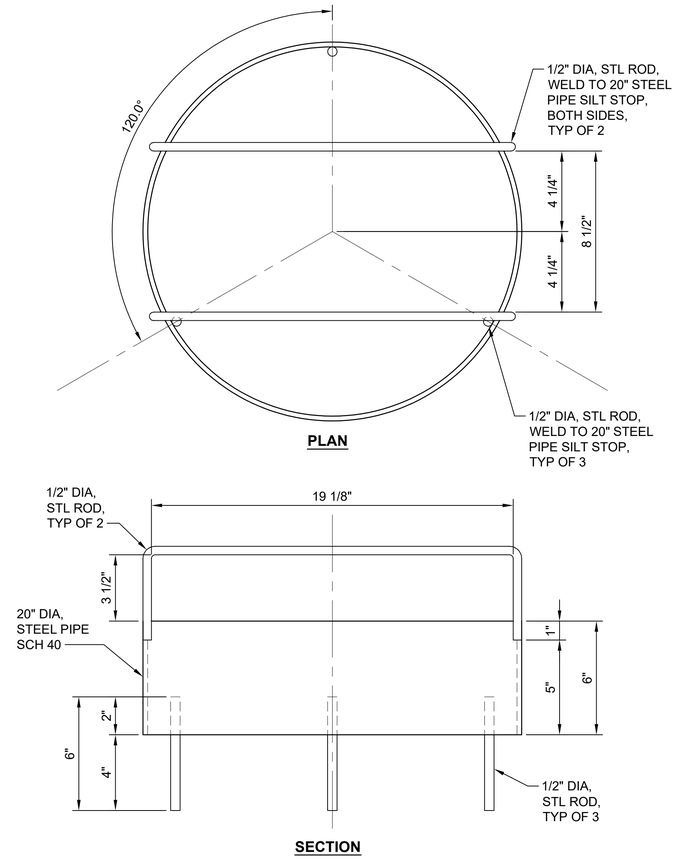

SILT STOP
DETAIL 2
NTS R-4

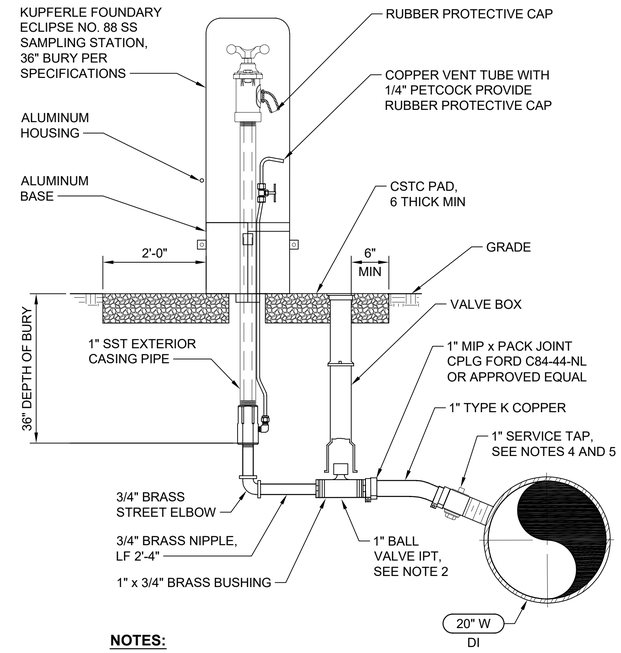

NOTES:

1. DO NOT BACKFILL UNTIL ALL FITTINGS HAVE BEEN INSPECTED BY THE DISTRICT.
2. BALL VALVE SHALL BE FORD B11-444-NL (1 FEMALE IRON PIPE THREADS BOTH ENDS BALL VALVE) WITH FORD QT67 2" GATE VALVE OPERATING NUT.
3. ALL FITTINGS SHALL BE LEAD FREE BRASS.
4. DIRECT TAP ON DI PIPE, NO SADDLE.

SAMPLING STATION
DETAIL 3
NTS C-2

No.	DATE	REVISION	APPR.
	MAY 2025	ISSUED FOR PERMIT	

SNOHOMISH COUNTY PUD
PUBLIC UTILITY DISTRICT NO. 1
3301 OLD HARTFORD ROAD, LAKE STEVENS
WASHINGTON 98258 (425) 397-3000
MAILING ADDRESS: P.O. BOX 1107, EVERETT, WASHINGTON 98206

BURN ROAD RESERVOIR RESERVOIR DRAIN AND SAMPLING STATION DETAILS

HOYT F. GILLESPIE III, STATE OF WASHINGTON, 31993, REGISTERED PROFESSIONAL ENGINEER
05/21/2025

DATE	May 2025
DESIGNED	MTM
DRAWN	EDM
CHECKED	CGT
SCALE	AS SHOWN

WO# 100099341

WE– 965
DWG # R-5
SHEET 18
OF 37

Call 48 Hours Before You Dig
1-800-424-5555
UNDERGROUND SERVICE

Path: S:\Cad\Snohomish PUD\23-10882 Burn Rd Res\Vd Filename: P23-10882_R-5 Plot date: May 21, 2025-05:01:59pm CAD User: abradley.
Xref Filename: | X23-10882_TB | Tatich | X23-10882_Status | Stevens | Rogers | Gibson | McCrosky | Wildhood | Gillespie | Dahl |

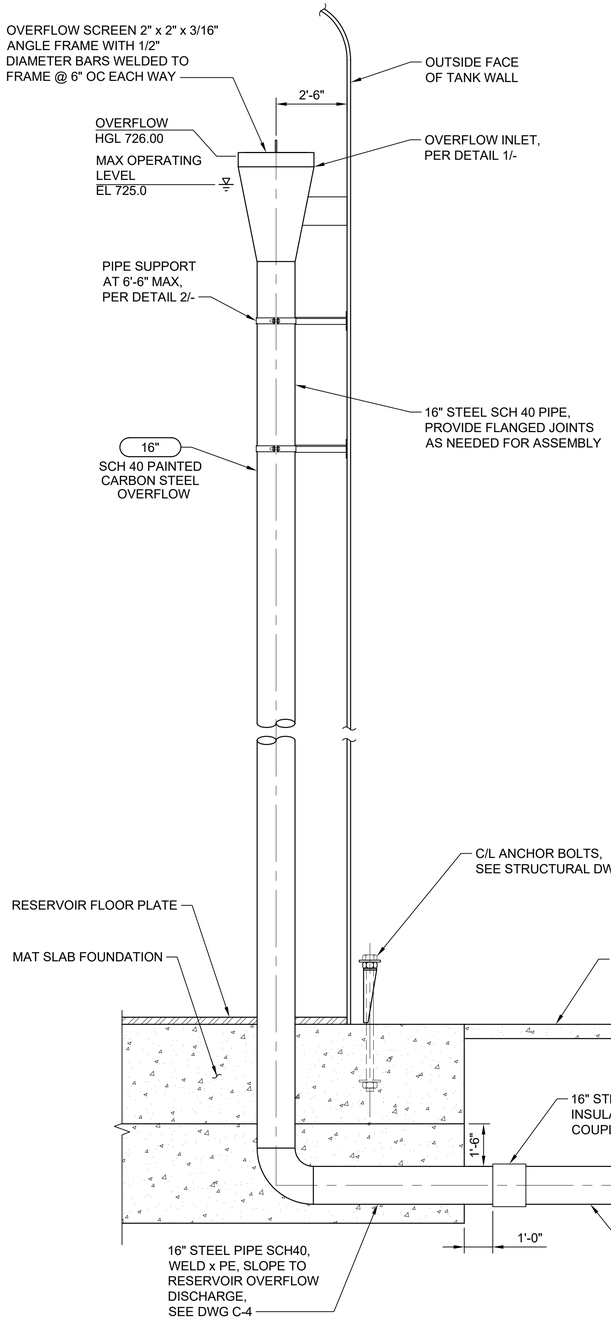

SECTION C

SCALE: 3/8" = 1'-0" R-1

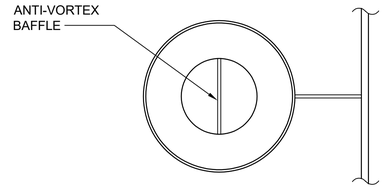

PLAN

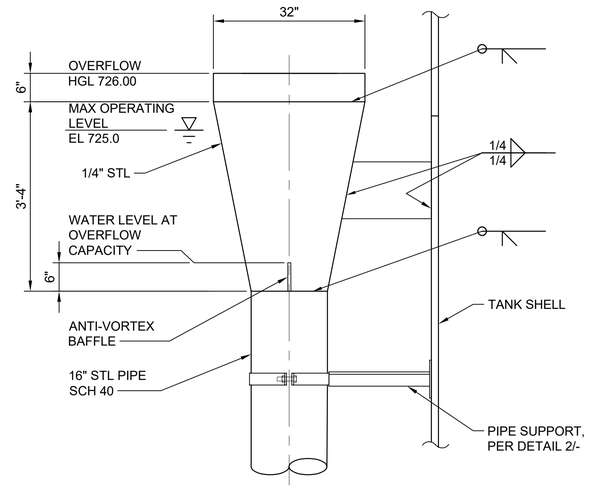

ELEVATION

OVERFLOW INLET

DETAIL 1

SCALE: 3/4" = 1'-0" -

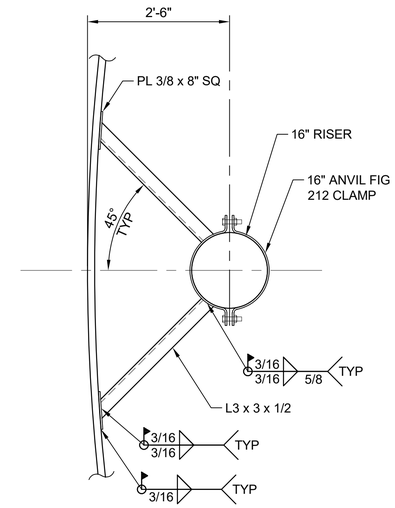

OVERFLOW SUPPORT

DETAIL 2

NTS -

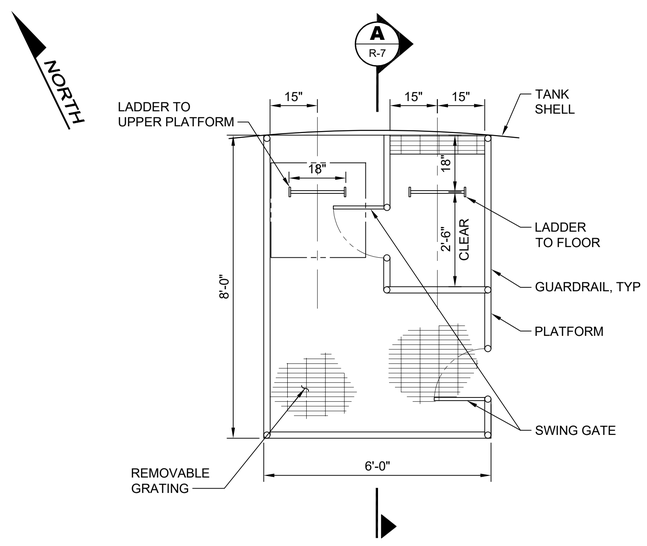

LOWER INTERIOR PLATFORM

DETAIL 3

SCALE: 1/2" = 1'-0" R-6

No.	DATE	REVISION	APPR.
	MAY 2025	ISSUED FOR PERMIT	

SNOHOMISH COUNTY PUD
PUBLIC UTILITY DISTRICT NO. 1
3301 OLD HARTFORD ROAD, LAKE STEVENS WASHINGTON 98258 (425) 397-3000
MAILING ADDRESS: P.O. BOX 1107, EVERETT, WASHINGTON 98206

BURN ROAD RESERVOIR
RESERVOIR OVERFLOW SECTIONS AND DETAILS

LANCE D. STEVENS — STATE OF WASHINGTON — 45574 — REGISTERED PROFESSIONAL ENGINEER
05/21/2025

DATE	May 2025
DESIGNED	MTM
DRAWN	EDM
CHECKED	CGT
SCALE	AS SHOWN

WO# 100099341

WE–	965
DWG #	R-6
SHEET	19
OF	37

Call 48 Hours Before You Dig
1-800-424-5555
UNDERGROUND SERVICE

Path: S:\Cad\Snohomish PUD\23-10882 Burn Rd Res\d Filename: P23-10882_R-6 Plot date: May 21, 2025-05:07pm CAD User: abradley.
Xref Filename: | X23-10882_TB | Tallch | X23-10882_Status | Stevens | Rogers | Gibson | McCrosky | Withhood | Gillespie | Dahl |

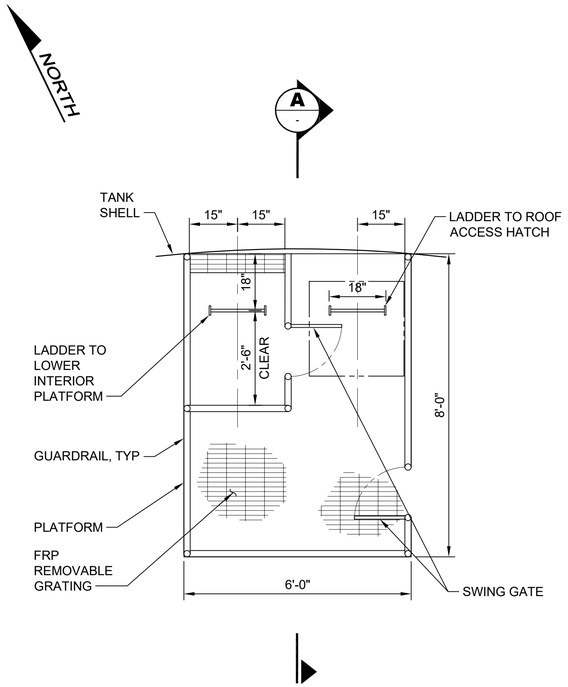

UPPER INTERIOR PLATFORM

PLAN 1

SCALE: 1/2" = 1'-0" -

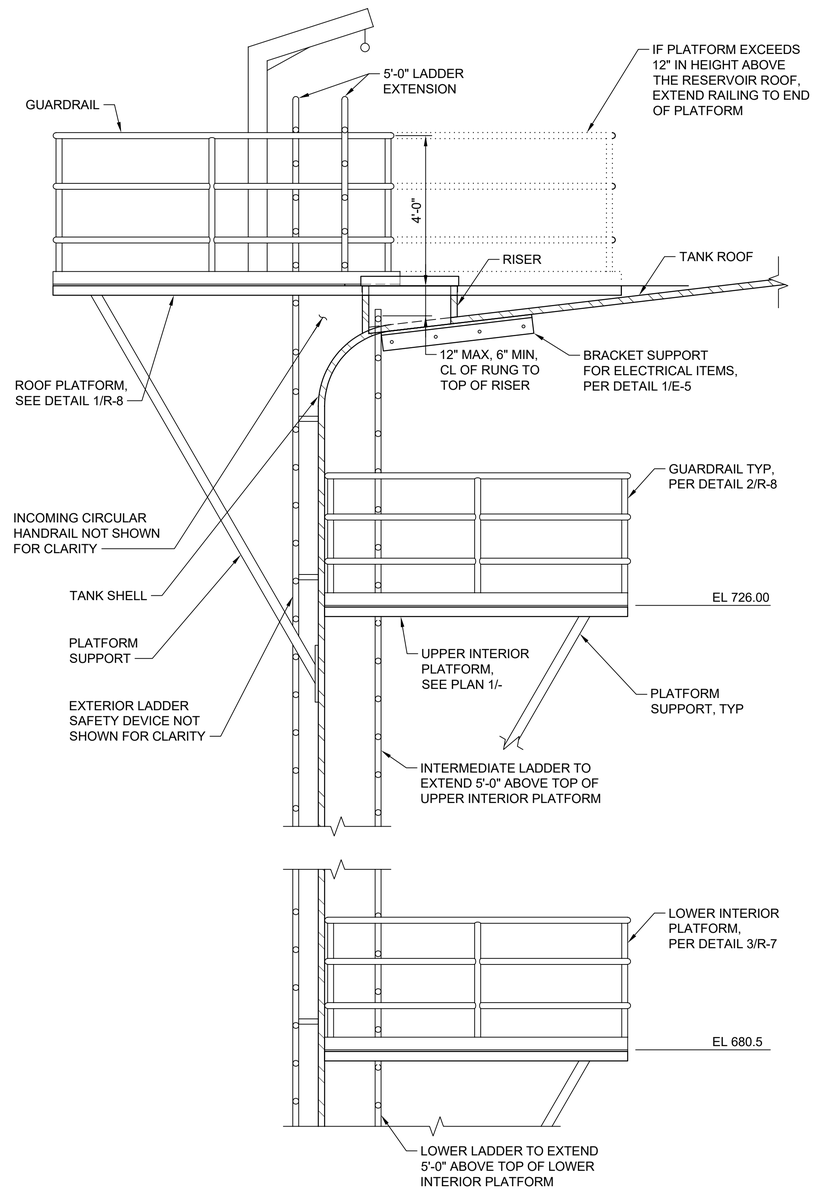

INTERIOR AND ROOF PLATFORM

SECTION A

SCALE: 1/2" = 1'-0" -

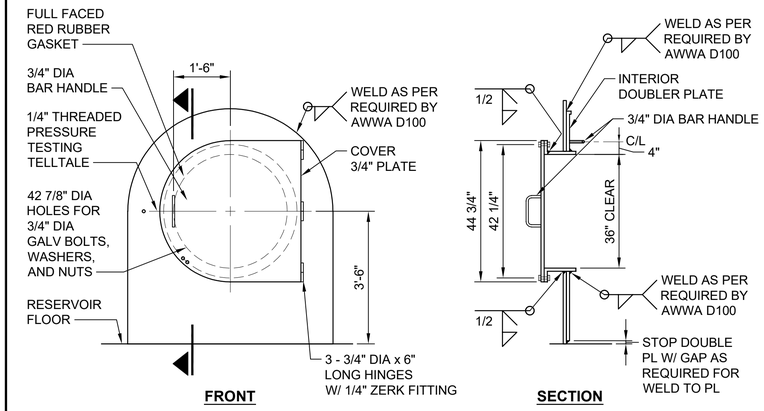

36" DIAMETER MANWAY

DETAIL 2

SCALE: 1/2" = 1'-0" R-1

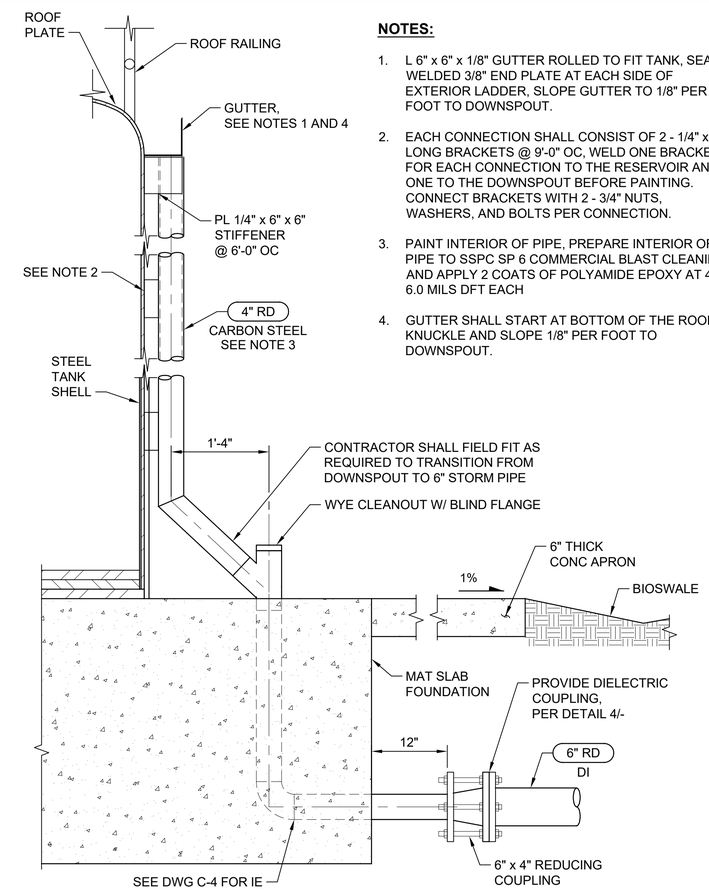

NOTES:

1. L 6" x 6" x 1/8" GUTTER ROLLED TO FIT TANK, SEAL WELDED 3/8" END PLATE AT EACH SIDE OF EXTERIOR LADDER, SLOPE GUTTER TO 1/8" PER FOOT TO DOWNSPOUT.
2. EACH CONNECTION SHALL CONSIST OF 2 - 1/4" x 6" LONG BRACKETS @ 9'-0" OC, WELD ONE BRACKET FOR EACH CONNECTION TO THE RESERVOIR AND ONE TO THE DOWNSPOUT BEFORE PAINTING. CONNECT BRACKETS WITH 2 - 3/4" NUTS, WASHERS, AND BOLTS PER CONNECTION.
3. PAINT INTERIOR OF PIPE, PREPARE INTERIOR OF PIPE TO SSPC SP 6 COMMERCIAL BLAST CLEANING AND APPLY 2 COATS OF POLYAMIDE EPOXY AT 4.0 - 6.0 MILS DFT EACH
4. GUTTER SHALL START AT BOTTOM OF THE ROOF KNUCKLE AND SLOPE 1/8" PER FOOT TO DOWNSPOUT.

RAIN GUTTER AND DOWNSPOUT

DETAIL 3

NTS TYP

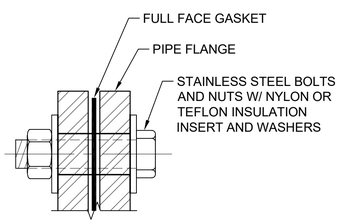

DIELECTRIC COUPLING

DETAIL 4

NTS TYP

Call 48 Hours Before You Dig

1-800-424-5555

UNDERGROUND SERVICE

No.	DATE	REVISION	APPR.
	MAY 2025	ISSUED FOR PERMIT	

SNOHOMISH COUNTY PUD
PUBLIC UTILITY DISTRICT NO. 1
3301 OLD HARTFORD ROAD, LAKE STEVENS
WASHINGTON 98258 (425) 397-3000
MAILING ADDRESS: P.O. BOX 1107,
EVERETT, WASHINGTON 98206

BURN ROAD RESERVOIR
RESERVOIR DETAILS
1 OF 2

LANCE D. STEVENS — STATE OF WASHINGTON — 45374 — REGISTERED PROFESSIONAL ENGINEER

05/21/2025

DATE	May 2025
DESIGNED	MTM
DRAWN	EDM
CHECKED	CGT
SCALE	AS SHOWN

WO# 100099341

WE–	965
DWG #	R-7
SHEET	20
OF	37

Path: S:\Cad\Snohomish PUD\23-10882 Burn Rd Resv\d_Filename: P23-10882_R-7_Plot date: May 21, 2025-05:03:32pm_CAD User: abradley.
Xref Filename: | X23-10882_TB | Tailch | X23-10882_Status | Stevens | Rogers | Gibson | McCrosky | Wildhood | Gillespie | Dahl |

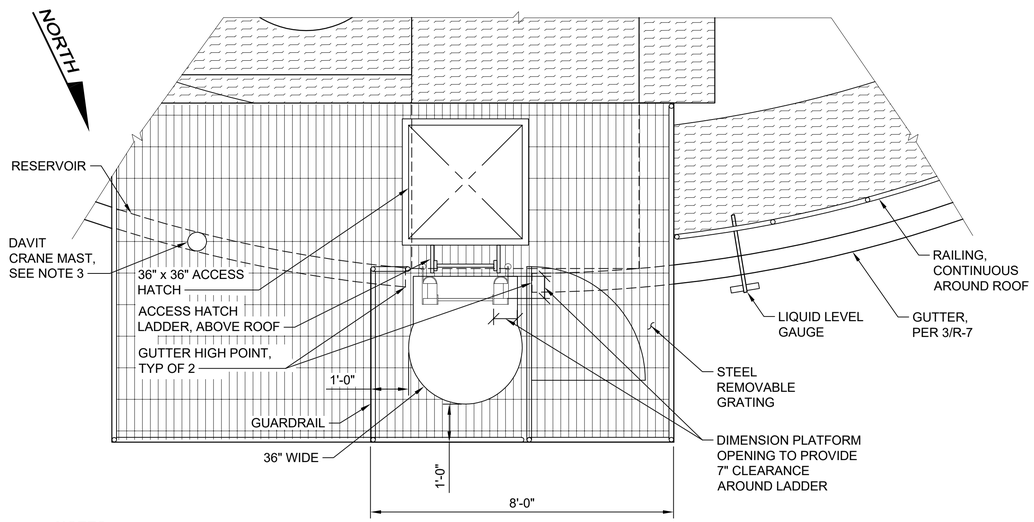

PLAN

NOTES:

1. LADDERS SHALL BE INSTALLED AT A PITCH OF 90° FROM THE HORIZONTAL.
2. PROVIDE LADDER SAFETY DEVICE WITH CABLE VERTICAL SAFETY SYSTEM COMPATIBLE WITIH 3M DBI-SALA LAD-SAF DETACHABLE CABLE TRAVELER 6160030. SAFETY SYSTEM SHALL INCLUDE D-RING ANCHORAGE SYSTEM AT TOP OF EACH LADDER RUN.
3. MAST SHALL BE POSITIONED SO THE CRANE HOOK SWINGS OVER THE CENTER OF THE ACCESS HATCH AND THE LADDER WELL.

PLATFORM, LADDER, AND RAILING AT ROOF

DETAIL 1

NTS R-1

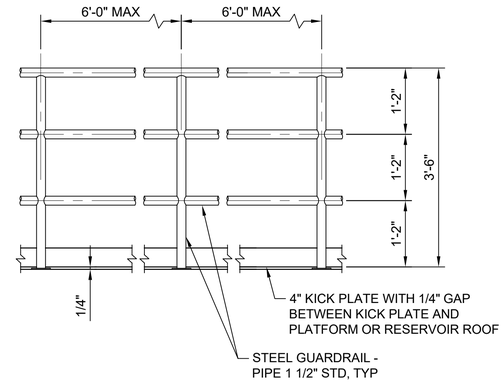

NOTES:

1. GUARDRAIL SHALL BE SET APPROXIMATELY 8" FROM EDGE OF SHELL. CONTRACTOR TO VERIFY IN FIELD.

TYPICAL RAILING

DETAIL 2

NTS TYP

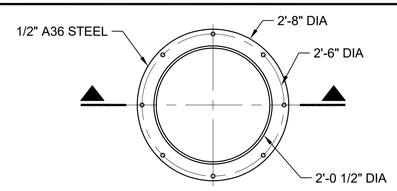

FLANGED STEEL VENT SUPPORT PLAN

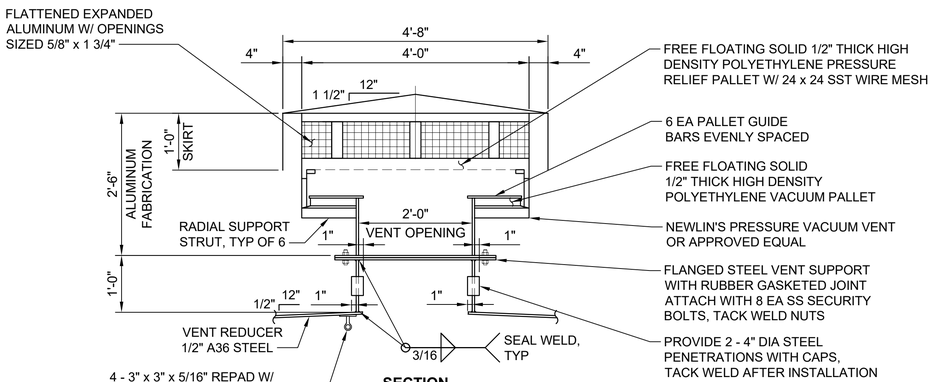

SECTION

24" ROOF VENT

DETAIL 3

SCALE: 3/4" = 1'-0" R-2

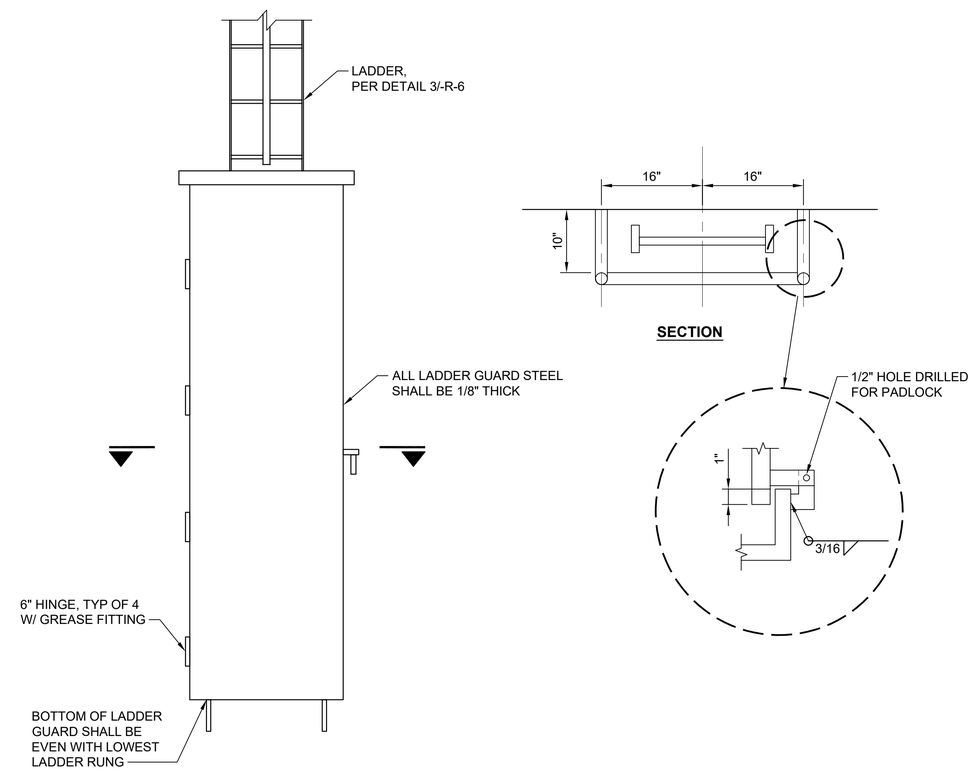

SECTION

LADDER GUARD

DETAIL 4

NTS TYP

No.	DATE	REVISION	APPR.
	MAY 2025	ISSUED FOR PERMIT	

SNOHOMISH COUNTY PUD PUBLIC UTILITY DISTRICT NO. 1
3301 OLD HARTFORD ROAD, LAKE STEVENS
WASHINGTON 98258 (425) 397-3000
MAILING ADDRESS: P.O. BOX 1107,
EVERETT, WASHINGTON 98206

BURN ROAD RESERVOIR
RESERVOIR DETAILS
2 OF 2

LANCE D. STEVENS STATE OF WASHINGTON 45374 REGISTERED PROFESSIONAL ENGINEER
05/21/2025

DATE	May 2025
DESIGNED	MTM
DRAWN	EDM
CHECKED	CGT
SCALE	AS SHOWN

WO# 100099341

WE–	965
DWG #	R-8
SHEET	21
OF	37

Call 48 Hours Before You Dig
1-800-424-5555
UNDERGROUND SERVICE

Path: S:\Cad\Snohomish PUD\23-10882 Burn Rd Resv\d Filename: P23-10882_R-8 Plot date: May 21, 2025-05:05:48pm CAD User: abradley
Xref Filename: | X23-10882_TB | Tallich | X23-10882_Status | Stevens | X23-10882_Prop Rsvr | Rogers | Gibson | McCrosky | Wildhood | Gillespie | Dahl |

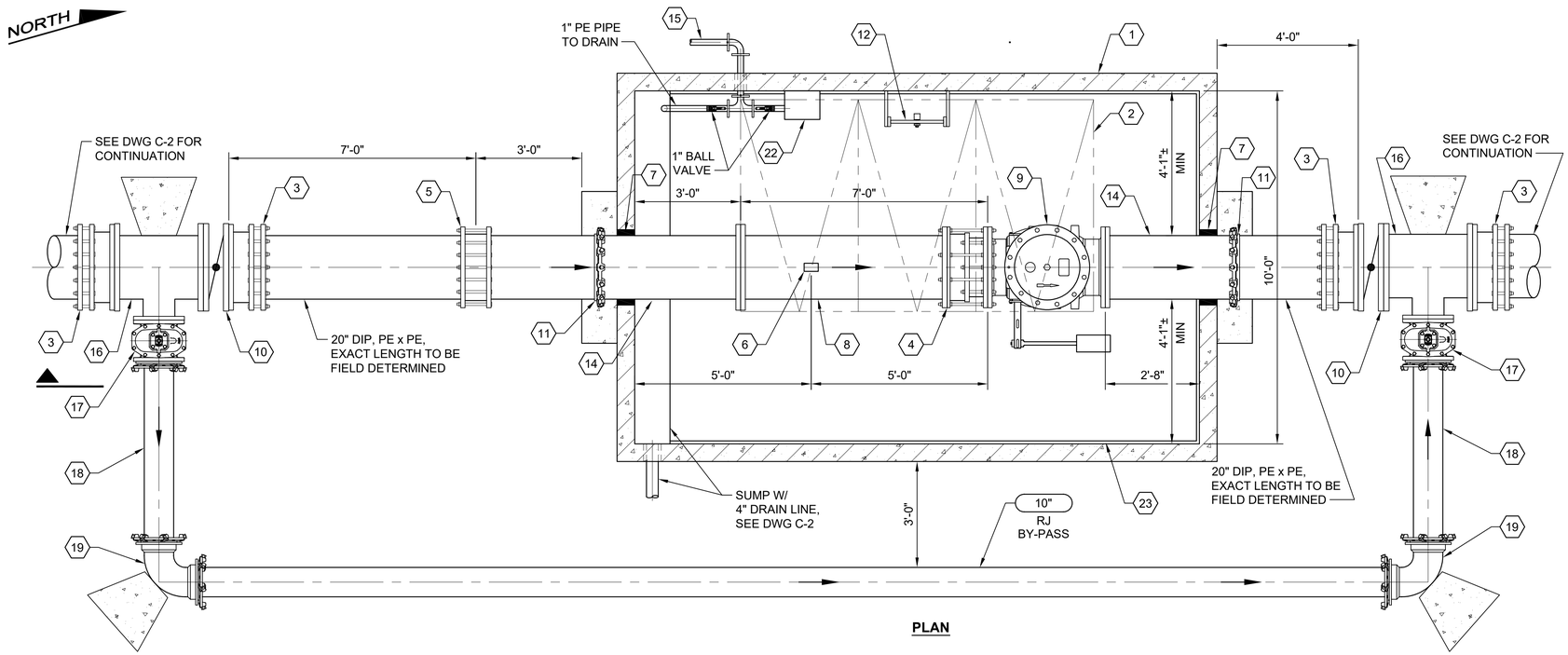

PLAN

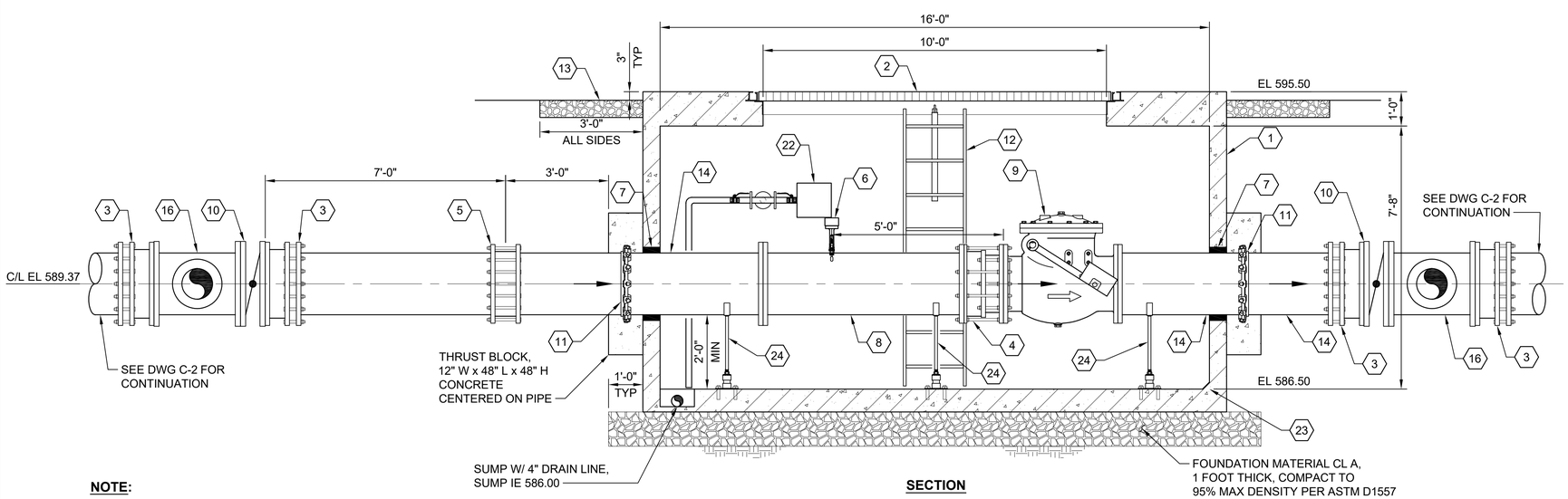

SECTION

NOTE:

SEE ELECTRICAL FOR CONDUITS AND WIRING TO AND INSIDE VAULTS. CONDUIT PENETRATIONS TO BE SEALED COMPLETELY WITH NON-SHRINK GROUT.

OUTLET METER AND VALVE VAULT

DETAIL 1

SCALE: 1/2" = 1'-0" C-2

MATERIAL LIST

1. 16' L x 10' W x 7'-8" H CONCRETE VAULT - PRECAST VAULT BY OLDCASTLE OR EQUAL. COAT INTERIOR AND EXTERIOR OF THE VAULT PER SPECIFICATION SECTION 09 97 15. COAT PIPING AND PIPE STANDS PER SPECIFICATION SECTION 09 97 10
2. ALUMINUM ACCESS HATCH - H-20 RATED 72" x 120" TRIPLE LEAF WITH SPRING ASSIST, LOCKING LATCH, PAD LOCK HASP, 180° OPEN
3. 20" FCA, RESTRAINED
4. 20" RESTRAINED DISMANTLING JOINT
5. 20" RESTRAINED COUPLING, ROMAC RC400 OR APPROVED EQUAL
6. SEAMETRICS EX 2.50 INSERTION MAGNETIC FLOW METER, DIRECT TAP OR APPROVED EQUAL
7. LINK SEAL WITH HYDROPHILIC FOAM, TYP
8. 20" DI SPOOL, FL x FL, L = 9'
9. 20" SWING CHECK VALVE, FL x FL
10. 20" BUTTERFLY VALVE, FL x FL
11. EBAA IRON #1100 SDB MEGALUG-MID SPAN RESTRAINT, POLYWRAP PRIOR TO PLACEMENT OF CONCRETE OR ROMAC 611 BELL CLAMP
12. GALVANIZED STEEL LADDER SHALL BE A BOLT-ON LADDER PER VAULT MANUFACTURER AND SHALL BE SIZED AS SHOWN. LADDER SHALL ALSO INCLUDE A LADDER-UP, BILCO LU2, GALVANIZED STEEL, OR APPROVED EQUAL
13. CSBC, 6" THICK, COMPACT TO 95% MAX DENSITY PER ASTM D1557, SEE DETAIL 2/C-6 FOR CSBC LIMIT
14. 20" DI SPOOL, FL x PE, LENGTH TO FIT
15. 4" PVC PIPE W/ 1" POLYPIPE FOR TRANSDUCER, SEE DWG'S C-2 AND R-5 AND ELECTRICAL
16. 20" x 10" DI TEE, FL x FL W/ THRUST BLOCK
17. 10" GATE VALVE, FL x RJ
18. 10" DI SPOOL, PE x PE, LENGTH TO FIT
19. 10" DI 90° BEND, RJ x RJ W/ THRUST BLOCK
20. NOT USED
21. NOT USED
22. TRANSDUCER W/ READOUT PAD, EXACT LOCATION TO BE FIELD DETERMINED WITH SNOHOMISH PUD, SEE ELECTRICAL
23. CONTRACTOR SHALL GROUT IN A 1" x 1" TRANSITION COVE AROUND THE WALL TO FLOOR JOINT AT ALL WALLS EXCEPT OVER THE SUMP
24. ADJUSTABLE PIPE SADDLE FOAM, TYP

Call 48 Hours Before You Dig
1-800-424-5555
UNDERGROUND SERVICE

No.	DATE	REVISION	APPR.
	MAY 2025	ISSUED FOR PERMIT	

SNOHOMISH COUNTY PUD
PUBLIC UTILITY DISTRICT NO. 1
3301 OLD HARTFORD ROAD, LAKE STEVENS WASHINGTON 98258 (425) 397-3000
MAILING ADDRESS: P.O. BOX 1107, EVERETT, WASHINGTON 98206

BURN ROAD RESERVOIR
RESERVOIR OUTLET VALVE AND METER VAULT DETAILS

JOHN A. GILLESPIE III, STATE OF WASHINGTON, 31993, REGISTERED PROFESSIONAL ENGINEER
05/21/2025

DATE	May 2025
DESIGNED	MTM
DRAWN	PLS
CHECKED	CGT
SCALE	1/2"=1'-0"

WO# 100099341

WE–	965
DWG #	R-9
SHEET	22
OF	37

Path: S:\Cad\Snohomish PUD\23-10882 Burn Rd Resv\d Filename: P23-10882_R-9 Plot date: May 21, 2025-05:06:26pm CAD User: abradley.
Xref Filename: | X23-10882_TB | Talich | X23-10882_Status | Stevens | X23-10882_Prop Vaults | Rogers | Gibson | McCrosky | Wildhood | Gillespie | Dahl |

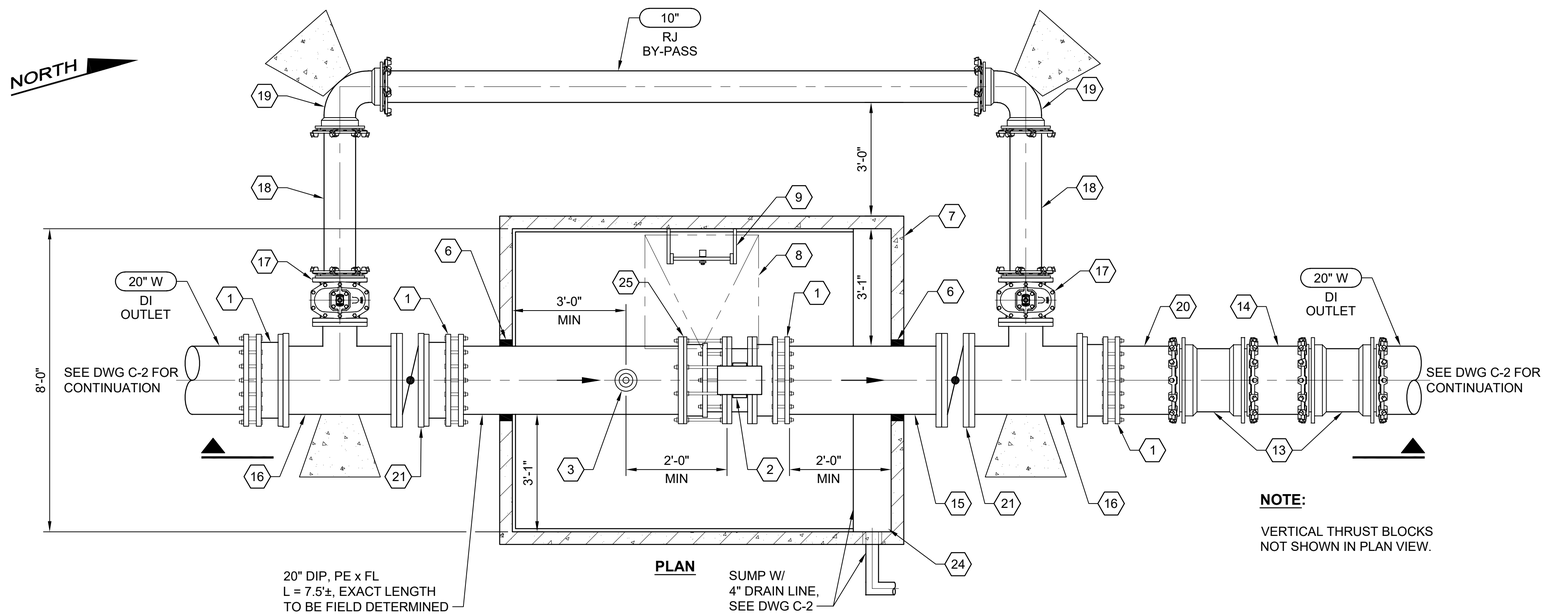

PLAN

NOTE:

VERTICAL THRUST BLOCKS NOT SHOWN IN PLAN VIEW.

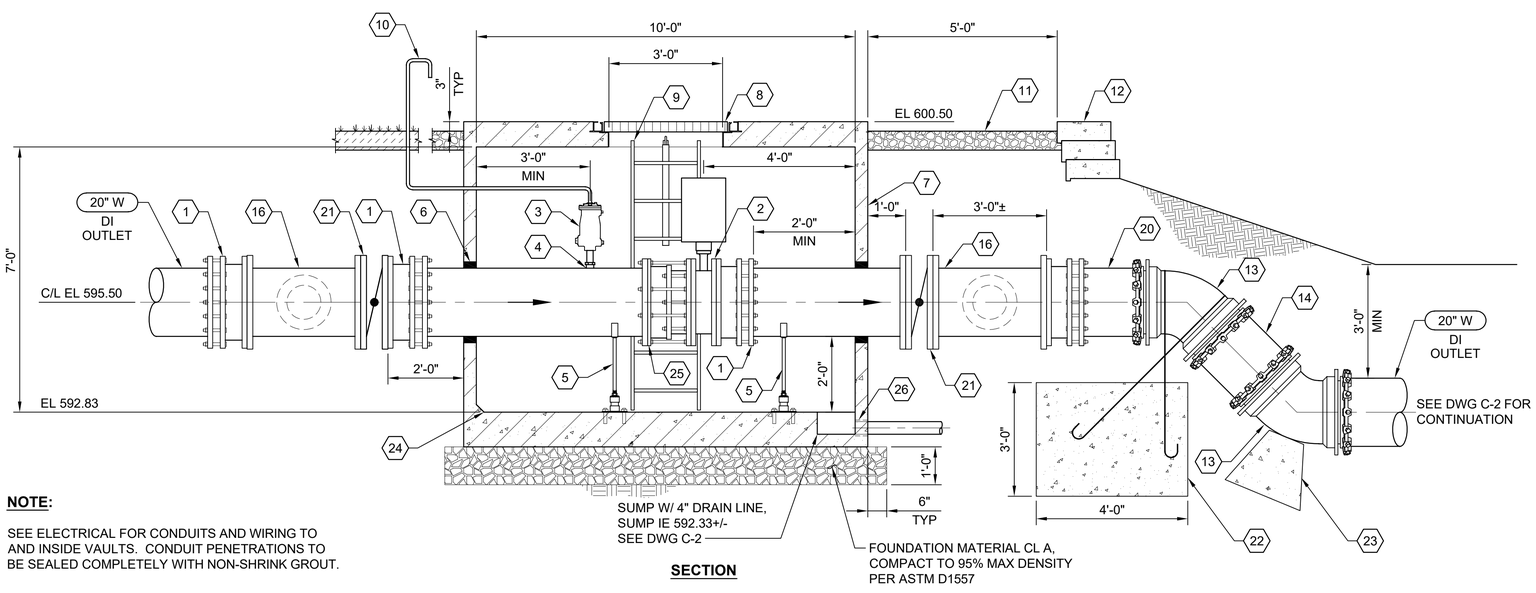

NOTE:

SEE ELECTRICAL FOR CONDUITS AND WIRING TO AND INSIDE VAULTS. CONDUIT PENETRATIONS TO BE SEALED COMPLETELY WITH NON-SHRINK GROUT.

SECTION

OUTLET SEISMIC VALVE VAULT

DETAIL 1

SCALE: 1/2" = 1'-0" C-2

MATERIAL LIST

1. 20" FCA, RESTRAINED
2. 20" BUTTERFLY VALVE , FL x FL, W/ SEISMIC ACTUATOR, SEE ELECTRICAL
3. 1" AIR/ VAC VALVE WITH COVER, APCO MODEL 143-C, VAL-MATIC 201C, CRISPIN CRUL-10, ARI, GOLDEN ANDERSON 945 OR APPROVED EQUAL, VENT PIPING SHOWN IN SECTION
4. 1" MUELLER 300 CORP STOP WITH END THREADS OR APPROVED EQUAL, DIRECT TAP TO PIPE
5. ADJUSTABLE PIPE SADDLE SUPPORT
6. LINK SEAL WITH HYDROPHILIC FOAM, TYP
7. 10' L x 8' W x 7' H CONCRETE VAULT - PRECAST VAULT BY OLDCASTLE OR EQUAL, 810-LA. COAT INTERIOR AND EXTERIOR OF THE VAULT PER SPECIFICATION SECTION 09 97 15. COAT PIPING AND PIPE STANDS PER SPECIFICATION SECTION 09 97 10.
8. ALUMINUM ACCESS HATCH - H-20 RATED, 36" x 36" SINGLE LEAF WITH SPRING ASSIST, LOCKING LATCH, PAD LOCK HASP, FULL 180° OPEN
9. GALVANIZED STEEL LADDER SHALL BE A BOLT-ON LADDER PER VAULT MANUFACTURER AND SHALL BE SIZED AS SHOWN, LADDER SHALL ALSO INCLUDE A LADDER-UP, BILCO LU2, GALVANIZED STEEL, OR APPROVED EQUAL
10. 2" GALVANIZED STEEL AIR\VAC VALVE VENT LINE, PROVIDE ALL NIPPLES, ELLS, UNIONS, 2" GALVANIZED GOOSE NECK PIPE WITH GALVANIZED SCREEN, AND 2" GALVANIZED PIPE, CORE DRILL VAULT AND FILL ANNULAR SPACE, COMPLETE, WITH NON-SHRINK GROUT, SEE SNOHOMISH PUD STANDARD DETAIL 401 FOR PIPING DETAIL FROM AIR/VAC VALVE TO GOOSE NECK VENT
11. CSBC, 6" THICK, COMPACT TO 95% MAX DENSITY PER ASTM D1557, SEE DWG C-2 FOR CSBC LIMIT
12. MODULAR BLOCK WALL PER DETAIL 4/C-6 AND DWG C-2
13. 20" DI 45° VERTICAL BEND W/ THRUST BLOCK, RJ x RJ
14. 20" DI SPOOL, PE x PE, LENGTH TO FIT
15. 20" DI SPOOL, FL x PE, LENGTH TO FIT
16. 20" x 10" DI TEE, FL x FL W/ THRUST BLOCK
17. 10" GATE VALVE, FL x RJ
18. 10" DI SPOOL, PE x PE, LENGTH TO FIT
19. 10" 90° DI BEND, RJ x RJ, LENGTH TO FIT
20. 20" DI SPOOL, PE x PE, L = 3'-0"
21. 20" BUTTERFLY VALVE, FL x FL
22. VERTICAL BEND THRUST BLOCK, 4'W x 5'L x 3'H, 3000 PSI CONCRETE, USE #6 REBAR (EPOXY COATED) AND EMBED INTO CONCRETE 24". REBAR SHALL LOOP OVER PIPE.
23. VERTICAL BEND THRUST BLOCK, 3'W x 4'L x 2'H, 3,000PSI CONCRETE, PLACE THRUST BLOCK AGAINST UNDISTURBED SOIL
24. CONTRACTOR SHALL GROUT IN A 1" x 1" TRANSITION COVE AROUND THE WALL TO FLOOR JOINT ON ALL SIDES EXCEPT OVER THE SUMP.
25. 20" RESTRAINED DISMANTLING JOINT
26. CORE DRILL AND FILL ANNULAR SPACE WITH NON-SHRINK GROUT

Call 48 Hours Before You Dig

1-800-424-5555

UNDERGROUND SERVICE

No.	DATE	REVISION	APPR.
	MAY 2025	ISSUED FOR PERMIT	

SNOHOMISH COUNTY PUD PUBLIC UTILITY DISTRICT NO. 1
3301 OLD HARTFORD ROAD, LAKE STEVENS
WASHINGTON 98258 (425) 397-3000
MAILING ADDRESS: P.O. BOX 1107,
EVERETT, WASHINGTON 98206

BURN ROAD RESERVOIR
RESERVOIR OUTLET SEISMIC VALVE VAULT DETAILS

JOHN T. GILLESPIE III, STATE OF WASHINGTON, 31993, REGISTERED PROFESSIONAL ENGINEER
05/21/2025

DATE	May 2025
DESIGNED	MTM
DRAWN	PLS
CHECKED	CGT
SCALE	AS SHOWN

WO# 100099341

WE–	965
DWG #	R-10
SHEET	23
OF	37

Path: S:\Cad\Snohomish PUD\23-10882 Burn Rd Res\Vd Filename: P23-10882_R-10 Plot date: May 21, 2025-05:07:10pm CAD User: abradley.
Xref Filename: | X23-10882_TB | Talloch | X23-10882_Status | Stevens | X23-10882_Prop Vaults | Rogers | Gibson | McCrosky | Wildhood | Gillespie | Dahl |

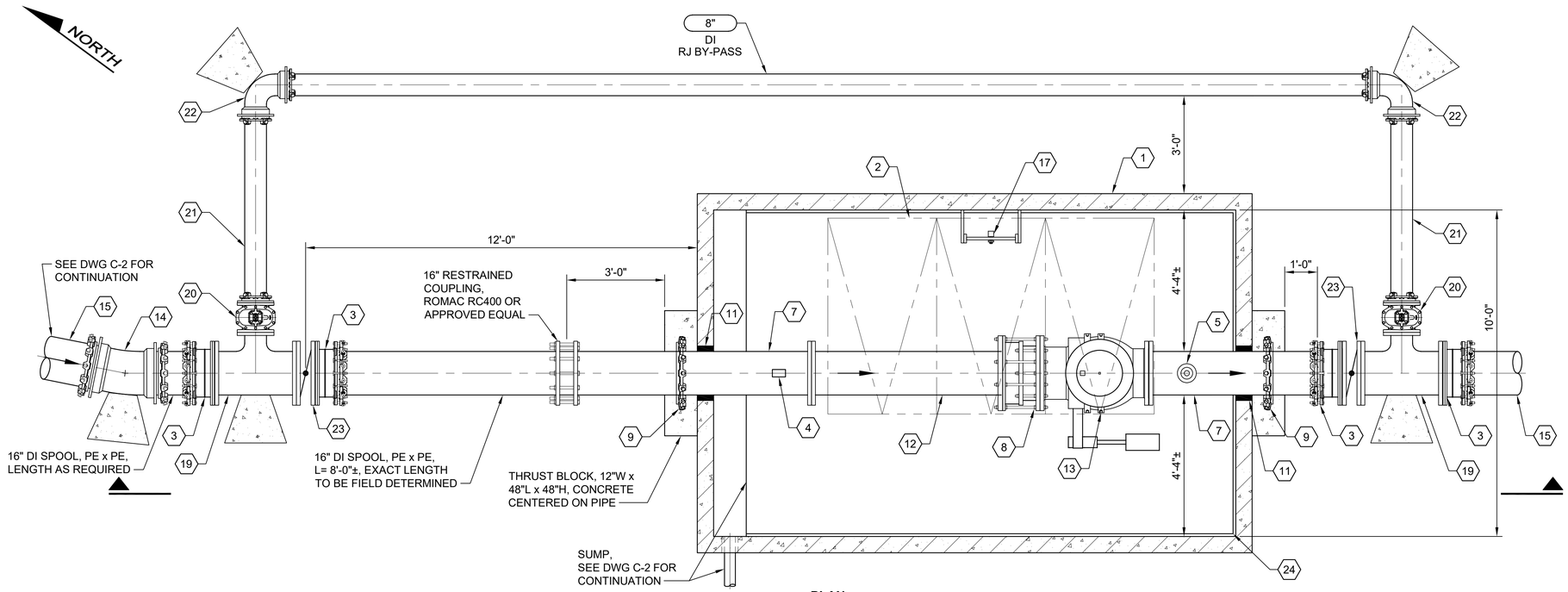

PLAN

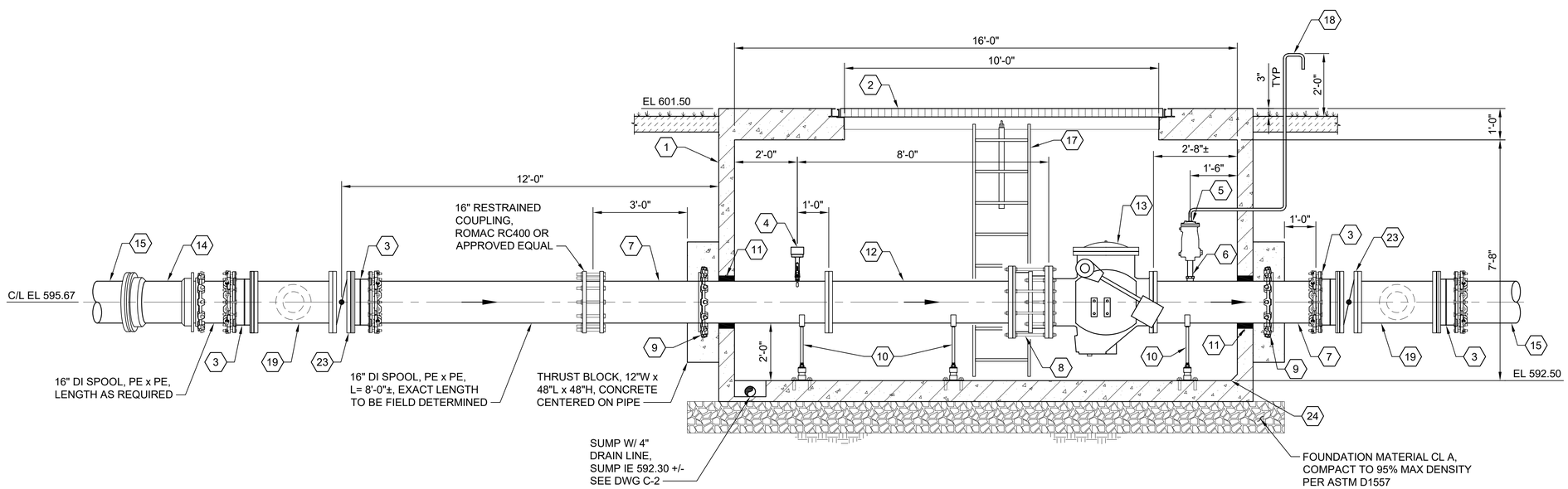

SECTION

NOTE:

BY-PASS NOT SHOWN IN SECTION.

INLET METER AND VALVE VAULT

DETAIL 1 / C-2

SCALE: 1/2" = 1'-0"

NOTE:

1. SEE ELECTRICAL FOR CONDUITS AND WIRING TO AND INSIDE VAULTS. CONDUIT PENETRATIONS TO BE SEALED COMPLETELY WITH NON-SHRINK GROUT.

MATERIAL LIST:

1. 16' L x 10' W x 7'-8" H CONCRETE VAULT - PRECAST VAULT BY OLDCASTLE OR EQUAL. COAT INTERIOR AND EXTERIOR OF THE VAULT PER SPECIFICATION SECTION 09 97 15. COAT PIPING AND PIPE STANDS PER SPECIFICATION SECTION 09 97 10.
2. ALUMINUM ACCESS HATCH - H-20 RATED 72" x 120" TRIPLE LEAF WITH SPRING ASSIST, LOCKING LATCH, PAD LOCK HASP, 180° OPEN
3. 16" FCA, RESTRAINED
4. SEAMETRICS EX250 INSERTION MAGMETER, DIRECT TAP OR APPROVED EQUAL
5. 1" AIR/ VAC VALVE WITH COVER, APCO MODEL 143-C, VAL-MATIC 201C, CRISPINCRUL-10, ARI, GOLDEN ANDERSON 945 OR APPROVED EQUAL, VENT LINE NOT SHOWN IN PLAN VIEW
6. 1" MUELLER 300 CORP STOP WITH END THREADS OR APPROVED EQUAL, DIRECT TAP TO PIPE
7. 16" DI SPOOL, FL x PE, LENGTH TO FIT
8. 16" RESTRAINED DISMANTLING JOINT
9. EBAA IRON #1100 SDB MEGALUG-MID SPAN RESTRAINT, POLYWRAP PRIOR TO PLACEMENT OF CONCRETE OR ROMAC 611 BELL CLAMP
10. ADJUSTABLE PIPE SADDLE SUPPORT
11. LINK SEAL WITH HYDROPHILIC FOAM, TYP
12. 16" DI SPOOL, FL x FL, L = 7' ±
13. 16" SWING CHECK VALVE, FL x FL
14. 16" DI 11.25° BEND, RJ x RJ W/ THRUST BLOCK
15. 16" DI PIPE, SEE DWG C-2 FOR CONTINUATION
16. NOT USED
17. GALVANIZED STEEL LADDER SHALL BE A BOLT-ON LADDER PER VAULT MANUFACTURER AND SHALL BE SIZED AS SHOWN, LADDER SHALL ALSO INCLUDE A LADDER-UP, BILCO LU2, GALVANIZED STEEL, OR APPROVED EQUAL
18. 2" GALVANIZED STEEL AIR\VAC VALVE VENT LINE, PROVIDE ALL NIPPLES, ELLS, UNIONS, 2" GALVANIZED GOOSE NECK PIPE WITH GALVANIZED SCREEN, AND 2" GALVANIZED PIPE, CORE DRILL VAULT AND FILL ANNULAR SPACE, COMPLETE, WITH NON-SHRINK GROUT, SEE SNOHOMISH PUD STANDARD DETAIL 401 FOR PIPING DETAIL FROM AIR/VAC VALVE TO GOOSE NECK VENT
19. 16" x 8" DI TEE, FL x FL, W/ THRUST BLOCK
20. 8" GATE VALVE, FL x RJ
21. 8" DI SPOOL, PE x PE, LENGTH TO FIT
22. 8" DI 90° BEND, RJ x RJ, W/ THRUST BLOCK
23. 16" BUTTERFLY VALVE, FL x FL
24. CONTRACTOR SHALL GROUT IN A 1" x 1" TRANSITION COVE AROUND THE WALL TO FLOOR JOINT AT ALL WALLS EXCEPT OVER THE SUMP

Call 48 Hours Before You Dig
1-800-424-5555
UNDERGROUND SERVICE

No.	DATE	REVISION	APPR.
	MAY 2025	ISSUED FOR PERMIT	

SNOHOMISH COUNTY PUD
PUBLIC UTILITY DISTRICT NO. 1
3301 OLD HARTFORD ROAD, LAKE STEVENS
WASHINGTON 98258 (425) 397-3000
MAILING ADDRESS: P.O. BOX 1107,
EVERETT, WASHINGTON 98206

BURN ROAD RESERVOIR
RESERVOIR INLET VALVE VAULT DETAIL

HOYT F. GILLESPIE III, STATE OF WASHINGTON, 31993, REGISTERED PROFESSIONAL ENGINEER
05/21/2025

DATE	May 2025
DESIGNED	MTM
DRAWN	EDM
CHECKED	CGT
SCALE	1/2"=1'-0"

WO# 100099341

WE– 965
DWG # R-11
SHEET 24
OF 37

Path: S:\Cad\Snohomish PUD\23-10882 Burn Rd Res\d Filename: P23-10882_R-11 Plot date: May 21, 2025-05:07:49pm CAD User: abradley
Xref Filename: | X23-10882_TB | Tailch | X23-10882_Status | Stevens | X23-10882_Prop Vaults | Rogers | Gibson | McCrosky | Wildhood | Gillespie | Dahl |

GENERAL STRUCTURAL NOTES

A. GENERAL

1. SCOPE
THE GENERAL STRUCTURAL NOTES AND TYPICAL STRUCTURAL DETAILS ARE GENERAL AND APPLY TO TO THE ENTIRE PROJECT EXCEPT WHERE THERE ARE SPECIFIC INDICATIONS OR MODIFICATIONS TO THE CONTRARY.

2. APPLICABLE SPECIFICATIONS AND CODES
ALL CONSTRUCTION SHALL BE IN ACCORDANCE WITH THE BUILDING CODE, (SEE BELOW). THE PROVISIONS OF THE BUILDING CODE SHALL SUPERSEDE THE PLANS AND SPECIFICATIONS EXCEPT WHERE THE PLANS AND SPECIFICATIONS ARE MORE RESTRICTIVE.

IN ADDITION TO THE BUILDING CODE, CONSTRUCTION SHALL CONFORM TO OTHER STANDARDS AND CODES AS REFERENCED ON THE DRAWINGS OR IN THE SPECIFICATIONS.

3. DIMENSIONS
STRUCTURAL DIMENSIONS CONTROLLED BY OR RELATED TO MECHANICAL AND ELECTRICAL EQUIPMENT SHALL BE VERIFIED BY THE CONTRACTOR PRIOR TO CONSTRUCTION.

REFER TO MECHANICAL AND ELECTRICAL DRAWINGS FOR SIZE AND LOCATION OF ALL OPENINGS FOR DUCTS, PIPING, CONDUITS, ETC., NOT SHOWN. ALL OPENINGS IN STRUCTURAL MEMBERS SHALL BE APPROVED BY THE STRUCTURAL ENGINEER. REFER TO CIVIL DRAWINGS AND SPECIFICATIONS FOR SUBGRADE INFORMATION AND CRITERIA. VERIFY ALL DIMENSIONS WITH CIVIL, MECHANICAL, AND ELECTRICAL DRAWINGS.

4. PROVISIONS FOR EQUIPMENT
MECHANICAL AND ELECTRICAL EQUIPMENT SUPPORTS, ANCHORAGES, OPENINGS, PIPE SLEEVES AND, PENETRATIONS, RECESSES AND REVEALS NOT SHOWN ON THE STRUCTURAL DRAWINGS, BUT REQUIRED BY OTHER CONTRACT DRAWINGS SHALL BE PROVIDED FOR, PRIOR TO CASTING CONCRETE.

5. CONSTRUCTION LOADS
STRUCTURES HAVE BEEN DESIGNED FOR OPERATIONAL LOADS ON THE COMPLETED STRUCTURES. DURING CONSTRUCTION, THE STRUCTURES SHALL BE PROTECTED BY BRACING AND SUPPORTS WHEREVER EXCESSIVE CONSTRUCTION LOADS MAY OCCUR.

6. DRAINAGE SURFACES
SLOPE DRAINAGE SURFACES UNIFORMLY TO DRAIN. SLOPE SHALL BE 1/4" PER FOOT, EXCEPT WHERE NOTED OTHERWISE ON THE PLANS. AT CONTRACTOR'S OPTION, BOTTOM OF SLAB MAY BE LEVEL AND MAINTAIN A MINIMUM THICKNESS AT FLOOR DRAINS.

B. STRUCTURAL DESIGN DATA

1. GENERAL

A. BUILDING CODE: 2021 INTERNATIONAL BUILDING CODE WITH SNOHOMISH COUNTY PUD AND BY REFERENCE THE MORE STRINGENT OF AWWA D100-11, WELDED CARBON STEEL TANKS FOR WATER STORAGE, AND ASCE 7-16, MINIMUM DESIGN LOADS FOR AND BUILDINGS AND OTHER STRUCTURES.

B. RISK CATEGORY IV
C. C. LOCATION: 48.132° N, 122.058° W, EL: 600
D. WATER: OVERFLOW HEIGHT = 126'-0"

2. DESIGN LOADS

A. SNOW LOAD
GROUND SNOW LOAD Pg: 34.5 PSF
FLAT-ROOF SNOW LOAD Pf: 28.7 PSF
SNOW EXPOSURE FACTOR Ce: 0.9
SNOW LOAD IMPORTANCE FACTOR: Is = 1.2
THERMAL FACTOR Ct = 1.1

B. WIND DESIGN DATA
BASIC WIND SPEED (3 SECOND GUST): 109 MPH
WIND EXPOSURE: B ALL DIRECTIONS
INTERNAL PRESSURE COEFFICIENT: ENCLOSED. GCpi = +/- .18
INTERNAL PRESSURE: ± 7 PSF

B. STRUCTURAL DESIGN DATA (cont.)

E. EARTHQUAKE DESIGN DATA:

SEISMIC IMPORTANCE FACTOR: Ie = 1.50
SEISMIC DESIGN CATEGORY: D
SITE CLASS C
S_S = 1.026
S_1 = 0.366
F_a = 1.2
F_v = 1.5
S_{DS} = 0.821
S_{D1} = 0.413

3.6 MG TANK:
RESPONSE MODIFICATION FACTOR (Ri): 3
RESPONSE MODIFICATION FACTOR (Rc): 1.5
ANALYSIS PROCEDURE: IN ACCORDANCE WITH AWWA D100-11
DESIGN BASE SHEAR (V): 8084KIPS (ASD)

F. SOILS DATA:

SOILS EXPLORATION INFORMATION IS CONTAINED IN GEOTECHNICAL ENGINEERING REPORT - PROPOSED BURN ROAD 726 RESERVOIR 12820 - 150TH STREET NE, ARLINGTON, WASHINGTON. PREPARED BY ZIPPERGEO, DATED MAY 2025. PROJECT NO. 2630.01.

FROST DEPTH: 18 INCHES
SLIDING FRICTION COEFFICIENT: 0.35
ALLOWABLE BEARING PRESSURE: 18,000 PSF

C. CONCRETE

1. SPECIFICATION
SEE SPECIFICATIONS FOR COMPLETE REQUIREMENTS FOR MIX DESIGNS, FORMING, REINFORCEMENT, PLACING, CURING, AND FINISHING.

2. DESIGN STRESSES

A. CAST-IN-PLACE CONCRETE
- STRUCTURAL CONCRETE: 4000 PSI AT 28 DAYS
- PLAIN CONCRETE: 3000 PSI AT 28 DAYS

STRUCTURAL CONCRETE SHALL BE USED FOR FOUNDATIONS, WALLS, SLABS, EQUIPMENT PADS, AND ALL LOAD BEARING CONCRETE. ALL OTHER CONCRETE SHALL BE PLAIN CONCRETE.

B. REINFORCING STEEL SHALL BE ASTM A615 DEFORMED BARS, GRADE 60. WELDED WIRE FABRIC SHALL BE ASTM A185 SMOOTH WIRE - fy = 60 KSI MINIMUM.

3. BAR SPLICES
SPLICES OF REINFORCING STEEL BARS SHALL BE IN ACCORDANCE WITH THE BUILDING CODE AND SHALL BE CLASS B, UNLESS OTHERWISE NOTED. THE LENGTH OF LAP SPLICE OF BARS OF DIFFERENT DIAMETER SHALL BE BASED ON THE SMALLER DIAMETER.

4. STANDARD HOOKS
BARS ENDING IN RIGHT ANGLE BENDS OR HOOKS SHALL CONFORM TO THE REQUIREMENTS OF THE BUILDING CODE.

5. SLOPING SLABS
MONOLITHIC SLABS WITH TOPS THAT ARE SLOPED SHALL HAVE BOTTOMS SLOPED THE SAME AMOUNT, MAINTAINING A UNIFORM SLAB THICKNESS, UNLESS OTHERWISE NOTED.

6. CHAMFERS
EXCEPT AS OTHERWISE NOTED, EXPOSED CONCRETE CORNERS AND EDGES SHALL HAVE 3/4" CHAMFERS. RE-ENTRANT CORNERS SHALL NOT HAVE FILLETS.

7. CONSTRUCTION JOINTS
ENGINEER APPROVAL IS REQUIRED FOR ANY CONSTRUCTION JOINTS NOT SHOWN ON THE DRAWINGS. CONSTRUCTION JOINTS SHALL BE DETAILED AS SHOWN ON THE DRAWINGS.

D. NON-SHRINK GROUT

GROUT FOR BASE PLATES, EQUIPMENT ANCHORAGE AND GENERAL PURPOSES SHALL BE APPROVED, NON-SHRINK CEMENTITIOUS GROUT CONTAINING NATURAL AGGREGATES DELIVERED TO THE JOB SITE IN FACTORY PREPACKAGED CONTAINERS REQUIRING ONLY THE ADDITION OF WATER, ASTM C1107 TYPE B OR C.

E. FOUNDATION PREPARATION

FOUNDATIONS, UNLESS NOTED OTHERWISE IN THE GEOTECHNICAL REPORT, SHALL BEAR ON UNDISTURBED, DENSE ALLUVIAL SOIL. IF UNDISTURBED, DENSE ALLUVIAL SOIL IS NOT FOUND AT THE BOTTOM OF THE FOOTING ELEVATION. WEAK MATERIAL SHALL BE REMOVED AND REPLACED WITH COMPACTED BACKFILL IN ACCORDANCE WITH THE SPECIFICATIONS. PROVIDE GRADED CRUSHED OR NATURAL ROCK BASE COURSE BENEATH CONCRETE SLABS OR FOOTINGS WHERE INDICATED.

BACKFILL SHALL BE COMPACTED TO 95% MAXIMUM DRY DENSITY PER ASTM D 1557.

F. SPECIAL INSPECTION

IN ADDITION TO THE INSPECTIONS REQUIRED BY SECTION 1701 OF THE IBC, SPECIAL INSPECTIONS SHALL BE PROVIDED DURING CONSTRUCTION OF THE FOLLOWING WORK:

1. ANCHOR BOLTS: INSTALLED IN CONCRETE PRIOR TO AND DURING THE PLACEMENT OF CONCRETE AROUND BOLTS.

2. ALL CONCRETE: SHALL BE INSPECTED IN ACCORDANCE WITH REQUIREMENTS OF 2021 IBC PARAGRAPH 1705.3.

3. PLACEMENT: OF ALL REINFORCING STEEL SHALL BE INSPECTED.

G. DEFERERED STRUCTURAL SUBMITTALS

SOME STRUCTURAL SYSTEMS ARE DEFINED AS VENDOR-DESIGNED COMPONENTS PER STRUCTURAL DOCUMENTS. THE ELEMENTS OF DESIGN ARE DEFERRED SUBMITTAL COMPONENTS AND HAVE NOT BEEN PERMITTED UNDER THE BASE BUILDING APPLICATION. THE CONTRACTOR WILL BE REQUIRED TO SUBMIT THE STAMPED COMPONENT SYSTEM DOCUMENTS TO THE BUILDING OFFICIAL FOR APPROVAL.

DOCUMENTS FOR PREFERRED SUBMITTAL ITEMS SHALL BE SUBMITTED TO THE ENGINEER, WHO SHALL REVIEW THEM FOR GENERAL CONFORMANCE TO THE DESIGN OF THE BUILDING. THE CONTRACTOR SHALL SUBMIT THESE REVIEWED DEFERRED SUBMITTAL DOCUMENTS HAVE BEEN APPROVED BY THE BUILDING OFFICIAL.

THE FOLLOWING LIST INCLUDES THE ITEMS THAT ARE DEFINED AS DEFERRED STRUCTURAL SUBMITTAL COMPONENTS. REFER TO THE ARCHITECTURAL, MECHANICAL. ELECTRICAL, AND CIVIL DRAWINGS FOR ADDITIONAL DEFERRED SUBMITTAL COMPONENTS.

DEFERRED STRUCTURAL SUBMITTAL COMPONENTS: RESERVOIR TANK INCLUDING ANCHOR BOLTS TO FOUNDATION.

H. STRUCTURAL OBSERVATIONS

THE ENGINEER OF RECORD SHALL PROVIDE VISUAL OBSERVATION OF THE STRUCTURAL SYSTEM, FOR GENERAL CONFORMANCE TO THE APPROVED PLANS AND SPECIFICATIONS, AT SIGNIFICANT CONSTRUCTION STAGES AND AT THE COMPLETION OF THE STRUCTURAL SYSTEM. STRUCTURAL OBSERVATION DOES NOT INCLUDE OR WAIVE THE RESPONSIBILITY FOR THE INSPECTIONS REQUIRED BY IBC SECTIONS 109, 1704 OR OTHER SECTIONS OF THE INTERNATIONAL BUILDING CODE. STRUCTURAL OBSERVATION REPORTS SHALL BE ISSUED TO THE OWNER, ARCHITECT, CONTRACTOR, AND BUILDING OFFICIAL AT THE SIGNIFICANT CONSTRUCTION STAGES.

Call 48 Hours Before You Dig
1-800-424-5555
UNDERGROUND SERVICE

No.	DATE	REVISION	APPR.
	MAY 2025	ISSUED FOR PERMIT	

SNOHOMISH COUNTY PUD
PUBLIC UTILITY DISTRICT NO. 1
3301 OLD HARTFORD ROAD, LAKE STEVENS
WASHINGTON 98258 (425) 397-3000
MAILING ADDRESS: P.O. BOX 1107,
EVERETT, WASHINGTON 98206

BURN ROAD RESERVOIR
GENERAL STRUCTURAL NOTES

KENNETH E. DAHL
STATE OF WASHINGTON
23044
STRUCTURAL ENGINEER
PROFESSIONAL ENGINEER
05/21/2025

DATE	May 2025
DESIGNED	MDW
DRAWN	AWB
CHECKED	KED
SCALE	N/A

WO# 100099341

WE–	965
DWG #	S-1
SHEET	25
OF	36

Path: S:\Cad\Snohomish PUD\23-10882 Burn Rd Resv\d Filename: P23-10882_S-1 Plot date: May 21, 2025-05:09:07pm CAD User: abradley.
Xref Filename: | X23-10882_Status | X23-10882_TB | Talich | Rogers | Stevens | Gibson | McCrosky | Wildhood | Gillespie | Dahl |

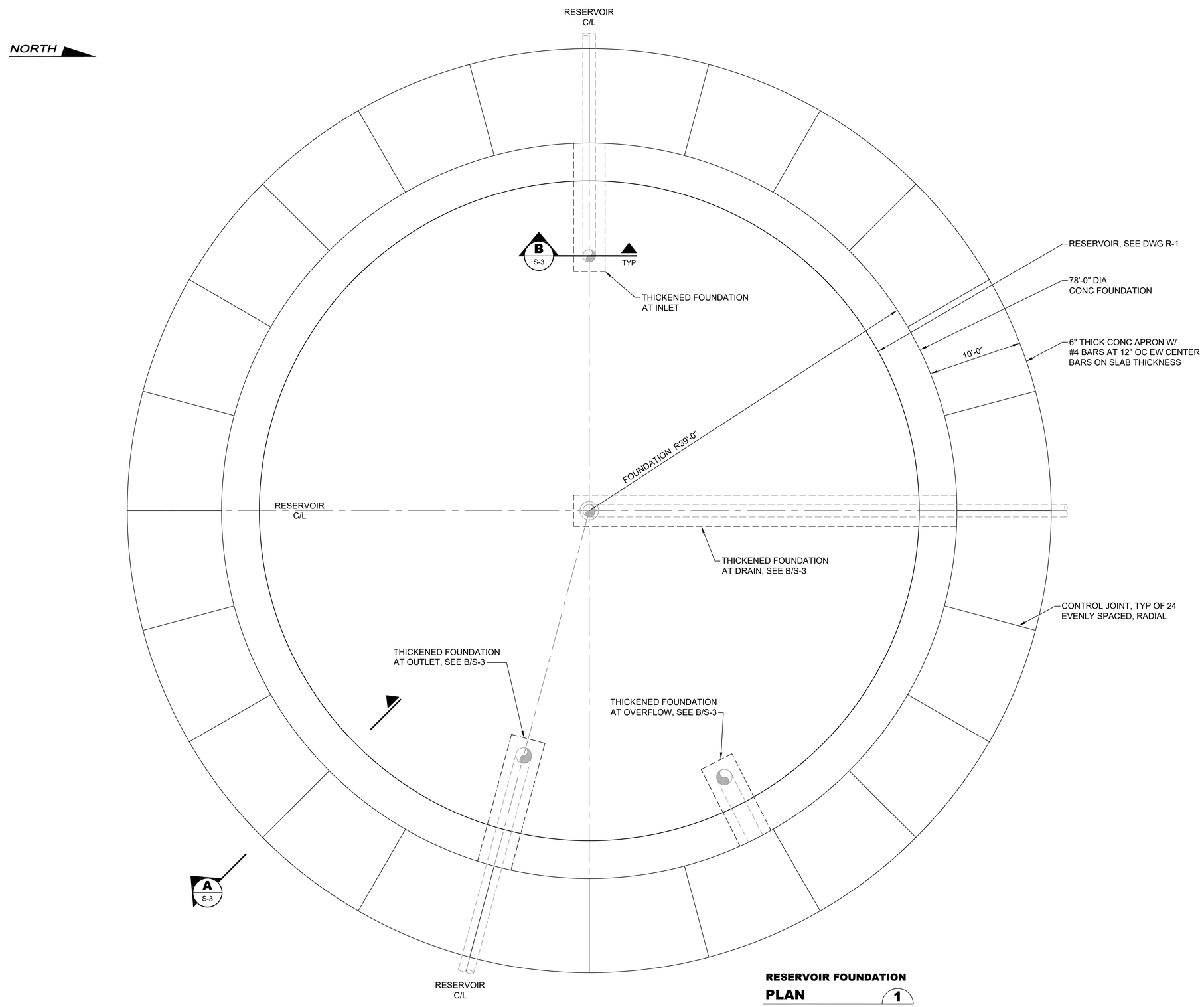

RESERVOIR FOUNDATION PLAN 1

SCALE: 3/16" = 1'-0"

No.	DATE	REVISION	APPR.
	MAY 2025	ISSUED FOR PERMIT	

SNOHOMISH COUNTY PUD
PUBLIC UTILITY DISTRICT NO. 1
3301 OLD HARTFORD ROAD, LAKE STEVENS WASHINGTON 98258 (425) 397-3000
MAILING ADDRESS: P.O. BOX 1107, EVERETT, WASHINGTON 98206

BURN ROAD RESERVOIR
RESERVOIR FOUNDATION PLAN

KENNETH E. DAHL
STATE OF WASHINGTON
23044
STRUCTURAL ENGINEER
PROFESSIONAL ENGINEER
05/21/2025

DATE	May 2025
DESIGNED	MDW
DRAWN	AWB
CHECKED	KED
SCALE	3/16"=1'-0"
WO# 100099341	
WE–	965
DWG #	S-2
SHEET	26
OF	36

811
Call 48 Hours Before You Dig
1-800-424-5555
UNDERGROUND SERVICE

Path: S:\Cad\Snohomish PUD\23-10882 Burn Rd Res\vt Filename: P23-10882_S-2 Plot date: May 21, 2025-05:09:53pm CAD User: abradley;
Xref Filename: | X23-10882_TB | Tallich | X23-10882_Status | Stevens | Wildhood | X23-10882_Prop Rsvr | Rogers | Gibson | McCrosky | Gillespie | Dahl |

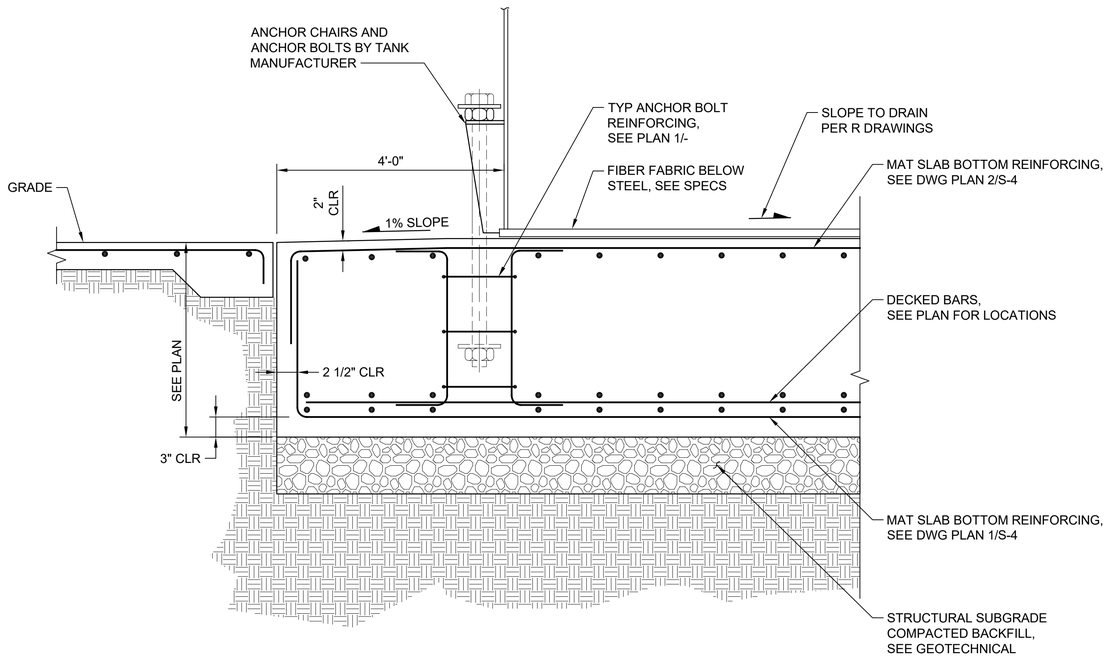

RESERVOIR FOUNDATION

SECTION A

SCALE: 3/4" = 1'-0" S-2

BAR SIZE	L_D	L_{DT}	L_{SB}	L_{SBT}	L_B
3	14	18	18	24	8
4	19	25	25	32	10
5	24	31	31	40	12
6	28	37	37	48	14
7	42	54	54	70	17
8	47	62	62	80	19
9	54	70	70	90	22
10	60	78	78	102	24
11	67	87	87	113	26

NOTES:

1. LENGTHS EXPRESSED IN INCHES.
2. LENGTHS APPLICABLE FOR f'c = 4000 psi, NORMAL WEIGHT CONCRETE ONLY, AND REINFORCEMENT WITH fy=60,000 PSI
3. L_D TENSION DEVELOPMENT LENGTH, BARS OTHER THAN TOP BARS
   L_{DT} TENSION DEVELOPMENT LENGTH, TOP BARS (SEE NOTE 4)
   L_{SB} CLASS B TENSION SPLICE, BAR SPACING
   L_{SBT} CLASS B TENSION SPLICE, TOP BARS (SEE NOTE 4)
   L_B COMPRESSION DEVELOPMENT LENGTH, BOTTOM BAR OR DOWEL
4. TOP BARS ARE HORIZONTAL BARS WITH MORE THAN 12 INCHES OF CONCRETE CAST BELOW THE BARS.
5. FOR EPOXY COATED BARS, INCREASE ALL LENGTHS 50 PERCENT.
6. USE OF THIS CHART IS RESTRICTED TO BARS WITH CONCRETE COVER OF AT LEAST ONE BAR DIAMETER AND CLEAR SPACE BETWEEN BARS OF AT LEAST TWO BAR DIMENSIONS. FOR OTHER SITUATIONS, SPLICE LENGTHS SHALL BE INCREASED BY 50%, EXCEPT FOR L_B.

CONCRETE REINFORCING BAR LAP SLICE AND DEVELOPMENT LENGTHS

DETAIL 1

NTS TYP

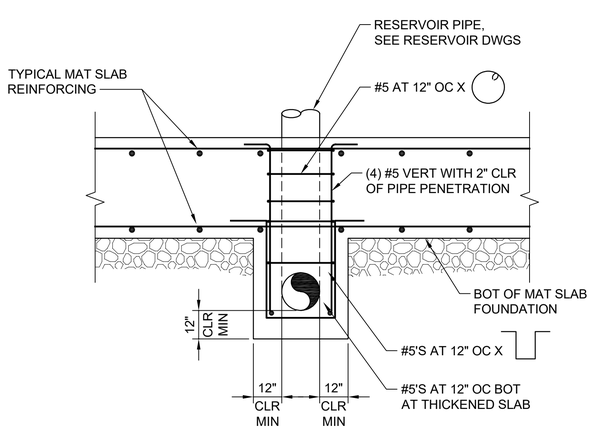

REINFORCING AT PIPE PENETRATIONS AND BELOW SLAB

SECTION B

SCALE: 3/8" = 1'-0" S-2

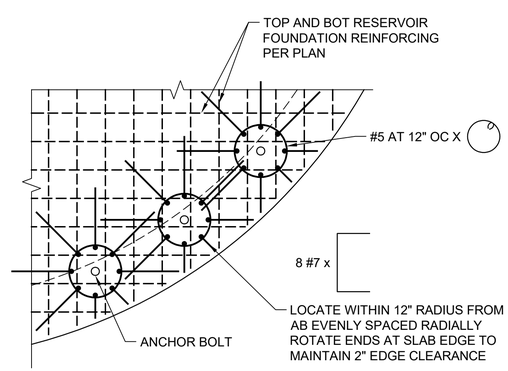

TYPICAL ANCHOR BOLT REINFORCING

PLAN 1

SCALE: 3/8" = 1'-0" S-2

No.	DATE	REVISION	APPR.
	MAY 2025	ISSUED FOR PERMIT	

SNOHOMISH COUNTY PUD
PUBLIC UTILITY DISTRICT NO. 1
3301 OLD HARTFORD ROAD, LAKE STEVENS
WASHINGTON 98258 (425) 397-3000
MAILING ADDRESS: P.O. BOX 1107,
EVERETT, WASHINGTON 98206

BURN ROAD RESERVOIR
RESERVOIR FOUNDATION
SECTIONS AND DETAILS

KENNETH E. DAHL
STATE OF WASHINGTON
23044
STRUCTURAL ENGINEER
PROFESSIONAL ENGINEER
05/21/2025

DATE	May 2025
DESIGNED	MDW
DRAWN	AWB
CHECKED	KED
SCALE	As Shown

WO# 100099341

WE–	965
DWG #	S-3
SHEET	27
OF	36

Call 48 Hours Before You Dig
1-800-424-5555
UNDERGROUND SERVICE

Path: S:\Cad\Snohomish PUD\23-10882 Burn Rd Resv\d Filename: P23-10882_S-3 Plot date: May 21, 2025-05:10:30pm CAD User: abradley.
Xref Filename: | X23-10882_TB | Tatich | X23-10882_Status | Stevens | Wildhood | Rogers | Gibson | McCrosky | Gillespie | Dahl |

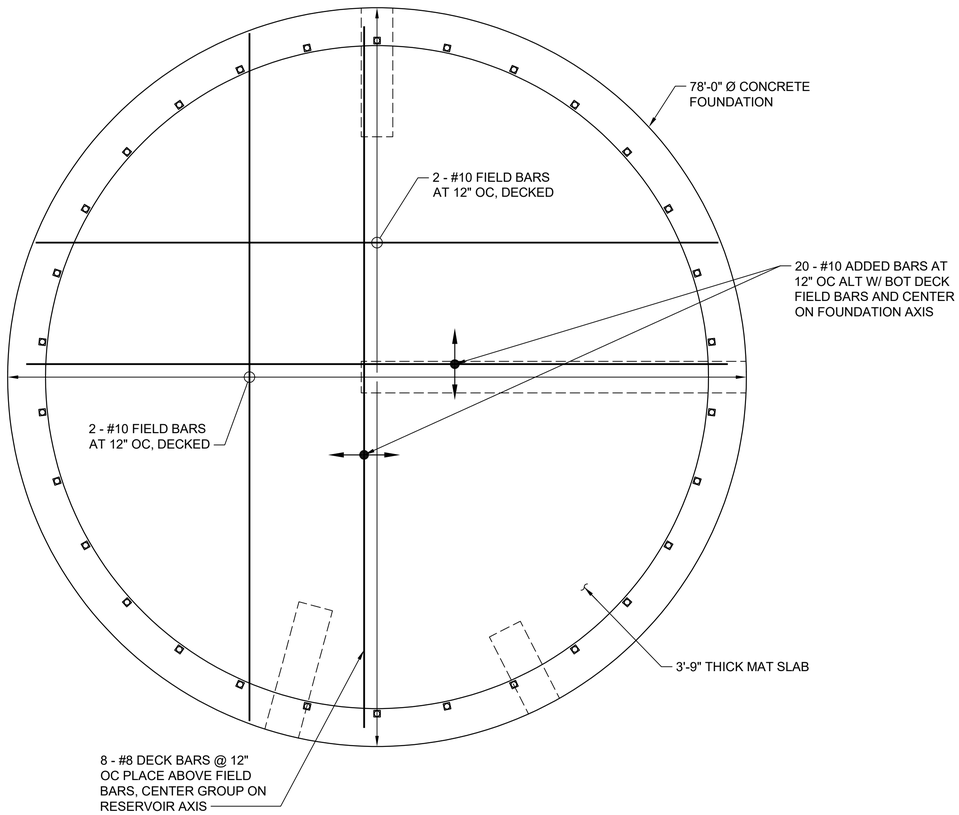

MAT SLAB BOTTOM REINFORCING

PLAN (1)

SCALE: 1/8" = 1'-0"

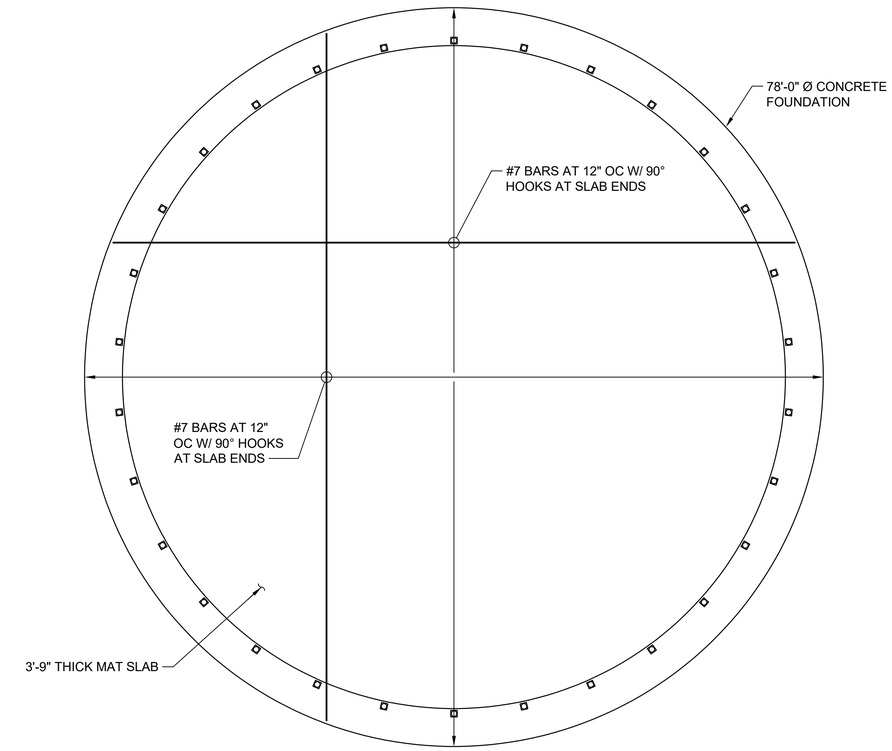

MAT SLAB TOP REINFORCING

PLAN (2)

SCALE: 1/8" = 1'-0"

HOOK END				
ALL GRADES (D) FINISHED BEND DIAMETER				
BAR SIZE	D	180° HOOKS		90° HOOKS
		E	J	A
#3	2 1/4"	5"	3"	6"
#4	3"	6"	4"	8"
#5	3 3/4"	7"	5"	10"
#6	4 1/2"	8"	6"	12"
#7	5 1/4"	10"	7"	14"
#8	6"	11"	8"	16"
#9	9 1/2"	15"	11 3/4"	19"
#10	10 3/4"	17"	13 1/4"	22"
#11	12"	19"	14 3/4"	24"
#14	18 1/4"	27"	21 3/4"	31"
#18	24"	36"	28 1/2"	41"

TABLE A						
MINIMUM TENSION EMBEDMENT LENGTHS, (Ldh) FOR STANDARD END HOOKS ON GRADE 60 BARS						
BAR SIZE	NORMAL WEIGHT CONCRETE, f'c (PSI)					
	3,000	4,000	5,000	6,000	7,000	8,000
#3	6"	6"	6"	6"	6"	6"
#4	8"	7"	7"	7"	7"	7"
#5	10"	9"	8"	7"	7"	7"
#6	12"	10"	9"	8"	8"	8"
#7	14"	12"	11"	10"	9"	9"
#8	16"	14"	12"	11"	10"	10"
#9	18"	15"	14"	13"	12"	11"
#10	20"	17"	15"	14"	14"	14"
#11	22"	19"	17"	16"	15"	15"
#14	37"	32"	29"	27"	25"	31"
#18	50"	43"	39"	35"	33"	35"

STANDARD HOOK & EMBEDMENT

DETAIL (3)

NTS — TYP

NOTES:

1. ABOVE VALUES VALID FOR ALL CASE IF" SIDE COVER GREATER THAN 2 1/2" END COVER GREATER THAN 2"
2. BAR DIMENSION REQUIRED TO MANUFACTURE HOOK.
3. FOR EPOXY COATED HOOKS, INCREASE THE ABOVE EMBEDMENT LENGTHS BY 20%.

Call 48 Hours Before You Dig

1-800-424-5555

UNDERGROUND SERVICE

No.	DATE	REVISION	APPR.
	MAY 2025	ISSUED FOR PERMIT	

SNOHOMISH COUNTY PUD
PUBLIC UTILITY DISTRICT NO. 1
3301 OLD HARTFORD ROAD, LAKE STEVENS WASHINGTON 98258 (425) 397-3000
MAILING ADDRESS: P.O. BOX 1107, EVERETT, WASHINGTON 98206

BURN ROAD RESERVOIR
SLAB REINFORCING PLANS AND TYPICAL DETAILS

KENNETH E. DAILY — STATE OF WASHINGTON — 23044 — STRUCTURAL ENGINEER — PROFESSIONAL ENGINEER

05/21/2025

DATE	May 2025
DESIGNED	MDW
DRAWN	AWB
CHECKED	KED
SCALE	As Shown

WO# 100099341

WE–	965
DWG #	S-4
SHEET	28
OF	36

Path: S:\Cad\Snohomish PUD\23-10882 Burn Rd Resv\d Filename: P23-10882_S-4 Plot date: May 21, 2025-05:11:13pm CAD User: abradley.
Xref Filename: | X23-10882_TB | Tallich | X23-10882_Status | Stevens | Widhood | Rogers | Gibson | McCrosky | Gillespie | Daili |

MOTORS AND POWER EQUIPMENT

- GROUND ROD IN GROUND ROD BOX
- T — TRANSFORMER
- MOTOR STARTER W/ DISCONNECT
- 60A — DISCONNECT SWITCH, NON FUSED (60A) INDICATES AMPERAGE RATING
- F 100A 80AF — DISCONNECT SWITCH, FUSED 100=SWITCH RATING, 80=FUSE RATING
- UTILITY METERING
- M — MOTOR
- F — EXHAUST FAN
- PANELBOARD, SWITCHBOARD, MCC
- 50A — FUSE WITH AMPERE RATING
- PACKAGED POWER AND CONTROL PANEL
- M — UTILITY METERING
- GROUND
- SPD — SURGE PROTECTIVE DEVICE
- SA — SURGE ARRESTER
- DISCONNECT OR SWITCH
- TRANSFORMER
- 15/1 — THERMAL MAGNETIC CIRCUIT BREAKER, RATING/NO. POLES MO = MAGNETIC ONLY
- THERMAL OVERLOAD RELAY
- ATS - AUTOMATIC TRANSFER SWITCH
  MTS - MANUAL TRANSFER SWITCH
- XKVAR — POWER CAPACITOR WITH KVAR RATING
- VFD — VFD = VARIABLE FREQUENCY DRIVE
  VSD = VARIABLE SPEED DRIVE
  SSS = SOLID STATE STARTER
- 15 — MOTOR - NUMBER "15" INDICATES HORSEPOWER
- MS — MS OR M = MOTOR STARTER CONTACTOR
  C = CONTACTOR, BP = BYPASS CONTACTOR
  IC = ISOLATION CONTACTOR
- 3 — CURRENT TRANSFORMER , NUMBER "3" INDICATES NUMBER OF CTS
- PULL OUT SWITCH/PLUG-RECEPTACLE CONNECTION
- T — THERMOSTAT, HVAC
- TS — THERMOSTAT AND PRESSURE TRANSMITTER, HVAC

ELEMENTARY WIRING DIAGRAM SYMBOLS

N.O. NORMALLY OPEN	N.O. NORMALLY CLOSED	
SW	SW	SWITCH
PB	PB	PUSH BUTTON
NO	NC	CONTACT
FS	FS	FLOW SWITCH
LS	LS	LEVEL SWITCH
PS	PS	PRESSURE SWITCH
TS	TS	TEMPERATURE SWITCH
ZS	ZS	LIMIT SWITCH

- FT — INSTRUMENT - FS = FLOW SWITCH, FT = FLOW XMTR, PS= PRESSURE SWITCH, PT = PRESSURE XMTR, ZS = LIMIT SWITCH, VS = VIBRATION SWITCH, VT = VIBRATION XMTR, MS = MOISTURE SWITCH, FE = FLOW ELEMENT, LE = LEVEL ELEMENT, TE = TEMP ELEMENT
- LS — INSTRUMENT - LS = LEVEL SWITCH, TS = TEMPERATURE SWITCH,
- HEATER - HEAT TRACE
- K — KIRK KEY INTERLOCK
- H O A XOO OOX — HOA = HAND/OFF/AUTO SWITCH
  HOR = HAND/OFF/REMOTE SWITCH
  OCA = OPEN/CLOSE/AUTO SWITCH
  RO = RUN/OFF
- A — INDICATING LIGHT R=RED, G=GREEN, A=AMBER, B=BLUE, W=WHITE
- CR — CONTROL RELAY / CONTACTOR
- TDR — TIME DELAY RELAY
- TWISTED SHIELDED PAIR (TSP)
- SV — SOLENOID VALVE
- RTM — RTM = RUN TIME METER, AMP = AMP METER, CNT = COUNTER
  HMI = OPERATOR CONTROL INTERFACE (VFD OPERATOR & DISPLAY)
- SPEED POT
- BATTERY
  HORN
- BLOWN FUSE INDICATOR
- OT1 R — INDICATING LIGHT:
  A = AMBER G = GREEN W = WHITE
  B = BLUE R = RED
- GIL
- HOA — SELECTOR SWITCH:
  FOR = FORWARD/OFF/REVERSE
  HOR = HAND/OFF/REMOTE
  HOA = HAND/OFF/AUTO
  RO = RUN/OFF
  POT = POTENTIOMETER

RACEWAY SYMBOLS

- A-4 — CONDUIT RUN 3/4"C, UNLESS OTHERWISE SHOWN
  4-#12 FOR POWER CIRCUITS
  TO PANEL "A" CKT "4"
- C-XX — TAGGED CONDUIT RUN - SEE CONDUIT & WIRE SCHEDULE FOR DETAILS.
  P=POWER, C=CONTROL, S=SIGNAL
- D — UNTAGGED CONDUIT RUN - CONTRACTOR TO PROVIDE RACEWAY FOR CONTROL OR SIGNAL WIRING AS REQUIRED BY THE EQUIPMENT, IN ACCORDANCE TO THE WIRING DIAGRAMS, OR AS SPECIFIED.
  CONDUIT SIZE PER NEC; MINIMUM 3/4"
  "C" = (120V) #14 CONTROL WIRE, #12 POWER WIRE
  "S" = TSP SIGNAL WIRE
  "D" = DEVICENET CABLE CONNECTION
  "E" = ETHERNET CABLE CONNECTION (CAT-5)
  "F" = FIRE ALARM PANEL CONNECTION
  PROVIDE # OF WIRES AS REQUIRED.
- CONDUIT TURNED UP OR TOWARD
- RACEWAY TURNED DOWN
- CONDUIT CONCEALED
- CONDUIT EXPOSED
- CONDUIT JUNCTION BOX
- PB HH — PB = PULL BOX, HH = HANDHOLE
  C=CONTROL, S=SIGNAL, P=POWER
- CONDUIT CAPPED
- CORD OR FLEXIBLE CONDUIT

WIRE DIAGRAMS, ONE-LINES, MISC

- EXISTING
- FUTURE
- PROPOSED WORK/EQUIPMENT
- CONDUCTORS NOT CONNECTED
- CONDUCTORS CONNECTED

REFERENCE SYMBOLS

- 100.1 1 — CONDUIT
- L — LIGHTS
- FIT-111 — EQUIPMENT TAG
- 1 — CONSTRUCTION NOTE
- FN # — INSTRUMENT TYPE / FUNCTION; INSTRUMENT DESIGNATION; INSTRUMENT NUMBER

LIGHTING & RECEPTACLE SYMBOLS

LIGHTING FIXTURES

- LIGHTING FIXTURE
- STRIP LIGHTING FIXTURE
- WALL MOUNTED FIXTURE (SURFACE OR ARM)
- POLE ARM MOUNTED FIXTURE
- RECESSED LIGHT FIXTURE
- INFRARED FLOOD LIGHT FIXTURE
- EXIT LIGHT FIXTURE WALL MOUNTED
- REMOTE EXIT LIGHT FIXTURE
- OS — OCCUPANCY SENSOR CEILING MOUNTED

SWITCHES

$P3a

D	DIMMER	2	DOUBLE POLE
E	EXISTING SWITCH	3	THREE WAY
K	KEY OPERATED SWITCH	4	FOUR WAY
M	MOTOR RATED		
MC	MOMENTARY CONTACT, THREE POSITION	a	LOWER CASE = SWIITCH LEG
P	SWITCH WITH PILOT LIGHT		
R	REOSTATE - SPEED CONTROL		
T	TIMER		
WP	WEATHER PROOF		
XP	EXPLOSION PROOF		

- LS — MAGNETIC LIMIT SWITCH
- KS — KEY SWITCH

SPECIAL PURPOSE CONNECTIONS

- 2 — SPECIAL PURPOSE EQUIPMENT CONNECTION
- 4 — SPECIAL PURPOSE EQUIPMENT CONNECTION WALL MOUNTED

RECEPTACLE OUTLETS

- 2 GFCI — DUPLEX RECEPTACLE OUTLET WALL MOUNTED (NEMA 5-15R UNLESS OTHERWISE SPECIFIED)
- 6 WP — QUADRUPLE RECEPTACLE OUTLET WALL MOUNTED
- DUPLEX RECEPTACLE OUTLET CEILING MOUNTED
- SINGLE RECEPTACLE
- 4 — SPECIAL PURPOSE RECEPTACLE OUTLET
- 6 — SPECIAL PURPOSE RECEPTACLE OUTLET WALL MOUNTED
- DUPLEX DATA OUTLET (RJ45 STYLE)
- (X) — SURFACE METAL RACEWAY WITH RECEPTACLE AT "X" OC

1, 2, 3, ETC ARE CIRCUIT NUMBERS OF PANEL BOARD TO WHICH OUTLET IS TO BE CONNECTED. REFER TO CIRCUIT SCHEDULE.

H	HORIZONTAL
WP	WEATHER PROOF
XP	EXPLOSION PROOF
GFCI	GROUND FAULT CIRCUIT INTERRUPTER

ABBREVIATIONS

A, AMP	AMPERE
AC	AIR COMPRESSOR, ALTERNATING CURRENT
AF	AMPERE FRAME
AFF	ABOVE FINISHED FLOOR
AI	ANALOG INPUT POINT (PLC)
AIC	AMPERES INTERRUPTING CAPACITY
AIL	AMBER INDICATING LIGHT
AL	ALARM
ALT	ALTERNATOR
AM	AMMETER
AO	ANALOG OUTPUT POINT (PLC)
AS	AMPERE SWITCH
AT	AMPERE TRIP
ATS	AUTOMATIC TRANSFER SWITCH
AWG	AMERICAN WIRE GAUGE
BAT	BATTERY
BC	BATTERY CHARGER
BH	BLOCK HEATER
BIL	BLUE INDICATING LIGHT
BKR	BREAKER
BP	BYPASS CONTRACTOR
C	CONDUIT, CONTROL
CAP	CAPACITOR
CB	CIRCUIT BREAKER
CKT	CIRCUIT
CNT	START COUNTER
CP	CONTROL PANEL
CPT	CONTROL POWER TRANSFORMER
CR	CONTROL RELAY
CT	CURRENT TRANSFORMER
CU	COPPER
CV	CHECK VALVE
DB	DIRECT BURIED
DC	DIRECT CURRENT
DEM	DEMAND
DF	DEMAND FACTOR
DI	AC DIGITAL INPUT POINT (PLC)
DM	DIGITAL METER
DO	AC DIGITAL OUTPUT POINT (PLC)
DWG	DRAWING
EDP	EMERGENCY DISTRIBUTION PANEL (ON GROUND FLOOR)
EF	EXHAUST FAN
ENCL	ENCLOSURE
EX	EXISTING
F	FUSED
FACP	FIRE ALARM CONTROL PANEL
FS	FLOW SWITCH
FT	FLOW TRANSMITTER
FVNR	FULL VOLTAGE NON-REVERSING
FU	FUSE
FVR	FULL VOLTAGE REVERSING
G, GND	GROUND
GEN	GENERATOR
GFI	GROUND FAULT INTERRUPTER
GFP	GROUND FAULT PROTECTOR
GIL	GREEN INDICATING LIGHT
GRS	(GRC) GALVANIZED RIGID STEEL (CONDUIT)
H	HOT, HIGH, HAND
HH	HAND HOLE
HID	HIGH INTENSITY DISCHARGE
HMI	HUMAN MACHINE INTERFACE
HOA	HAND OFF AUTO (SELECTOR SWITCH)
HP	HORSEPOWER
HS	HAND STATION (HOA SWITCH & POT)
HTR	HEATER
IC	ISOLATION CONTRACTOR
ISR	INTRINSICALLY SAFE RELAY
KVA	KILO VOLT AMPS
KVAR	KILO VOLT AMP REACTIVE
KVARH	KILOVAR HOUR
KW	KILOWATT
KWH	KILOWATT HOUR
L	LOW , LIGHT
LC	LIGHTING CONTACTOR
LCP	LOCAL CONTROL PANEL
LE	LEVEL ELEMENT
LS	LEVEL SWITCH
LT	LEVEL TRANSMITTER
LTG	LIGHTING
M	METER, MOTOR
MCC	MOTOR CONTROL CENTER
MCP	MAIN CONTROL PANEL
MFGR	MANUFACTURER
MH	MANHOLE
MO	MAGNETIC ONLY (CIRCUIT BREAKER)
MOV	MOTOR OPERATED VALVE
MS	MOTOR STARTER
MTS	MANUAL TRANSFER SWITCH
N	NEUTRAL
NC	NORMALLY CLOSED
NEC	NATIONAL ELECTRICAL CODE
NEMA	NATIONAL ELECTRICAL MANUFACTURERS ASSOCIATION
NF	NON FUSED
N.O.	NORMALLY OPEN
OI	OPERATOR INTERFACE
OIT	OPERATOR IN TROUBLE
OL	OVERLOAD RELAY
OT	OVER TEMP
P	POWER
PB	PUSH BUTTON
PBC	PULLBOX (CONTROL)
PBD	PULLBOX (DATA)
PBL	PUSH BUTTON - LIGHTED
PBP	PULLBOX (POWER)
PBS	PULLBOX (SIGNAL)
PCP	POWER AND CONTROL PANEL
PE	PHOTO ELECTRIC RELAY
PFR	PHASE FAILURE RELAY
PLC	PROGRAMMABLE LOGIC CONTROLLER
PMD	POWER MONITORING DEVICE
PNL	PANEL
POT	POTENTIOMETER
PS	PRESSURE SWITCH, PUMP STATION
PSE	PUGET SOUND ENERGY
PT	POTENTIAL TRANSFORMER
PVC	POLYVINYL CHLORIDE (CONDUIT)
RCP	REMOTE CONTROL PANEL
RIL	RED INDICATING LIGHT
RO	RUN - OFF
RTD	RESISTANCE TEMPERATURE DEVICE
RTM	RUN TIME METER
RV	REDUCED VOLTAGE
RVAT	REDUCED VOLTAGE AUTO TRANSFORMER
S	STARTER
SA	SIGNAL SURGE ARRESTOR
SCL	SEATTLE CITY LIGHT
SE	SERVICE ENTRANCE
SPD	SURGE PROTECTIVE DEVICE
SST	STAINLESS STEEL
SSS	SOLID STATE STARTER
SV	SOLENOID VALVE
T	THERMOSTAT
TC	TIME CLOCK
TDOD	TIME DELAY ON DE-ENERGIZATION
TDOE	TIME DELAY ON ENERGIZATION
TDR	TIME DELAY RELAY
TEL	TELEPHONE
TNI	TELEPHONE NETWORK INTERFACE
TS	TEMPERATURE SWITCH
TSP	TWISTED SHIELDED PAIR
TST	TWISTED SHIELDED THREE WIRE
TVSS	TRANSIENT VOLTAGE SURGE SUPPRESSER
TYP	TYPICAL
UH	UNIT HEATER
UPS	UNINTERRUPTIBLE POWER SUPPLY
V	VOLT
VS	VIBRATION SWITCH
VFD	VARIABLE FREQUENCY DRIVE
VSD	VARIABLE SPEED DRIVE
W	WATT
WHM	WATT HOUR METER
WIL	WHITE INDICATING LIGHT
WP	WEATHER PROOF
XFMR	TRANSFORMER
XP	EXPLOSION PROOF
XMTR	TRANSMITTER
ZS	LIMIT SWITCH

811 **Call 48 Hours Before You Dig**
1-800-424-5555
UNDERGROUND SERVICE

No.	DATE	REVISION	APPR.
	MAY 2025	ISSUED FOR PERMIT	

SNOHOMISH COUNTY PUD PUBLIC UTILITY DISTRICT NO. 1
3301 OLD HARTFORD ROAD, LAKE STEVENS
WASHINGTON 98258 (425) 397-3000
MAILING ADDRESS: P.O. BOX 1107,
EVERETT, WASHINGTON 98206

BURN ROAD RESERVOIR
ELECTRICAL SYMBOLS AND LEGEND

JEFFREY S. GIBSON, STATE OF WASHINGTON, 43880, REGISTERED PROFESSIONAL ENGINEER
05/21/2025

DATE	May 2025
DESIGNED	JSG
DRAWN	JJL
CHECKED	CGT
SCALE	

WO# 100099341

WE—	965
DWG #	E-1
SHEET	29
OF	37

Path: S:\Cad\Snohomish PUD\23-10882 Burn Rd Resvd Filename: P23-10882_E-1 Plot date: May 21, 2025-05:21:55pm CAD User: abradley.
Xref Filename: | X23-10882_TB | Tailch | Gibson | X23-10882_Status | Rogers | Stevens | McCrosky | Willohood | Gillespie | Dahl |

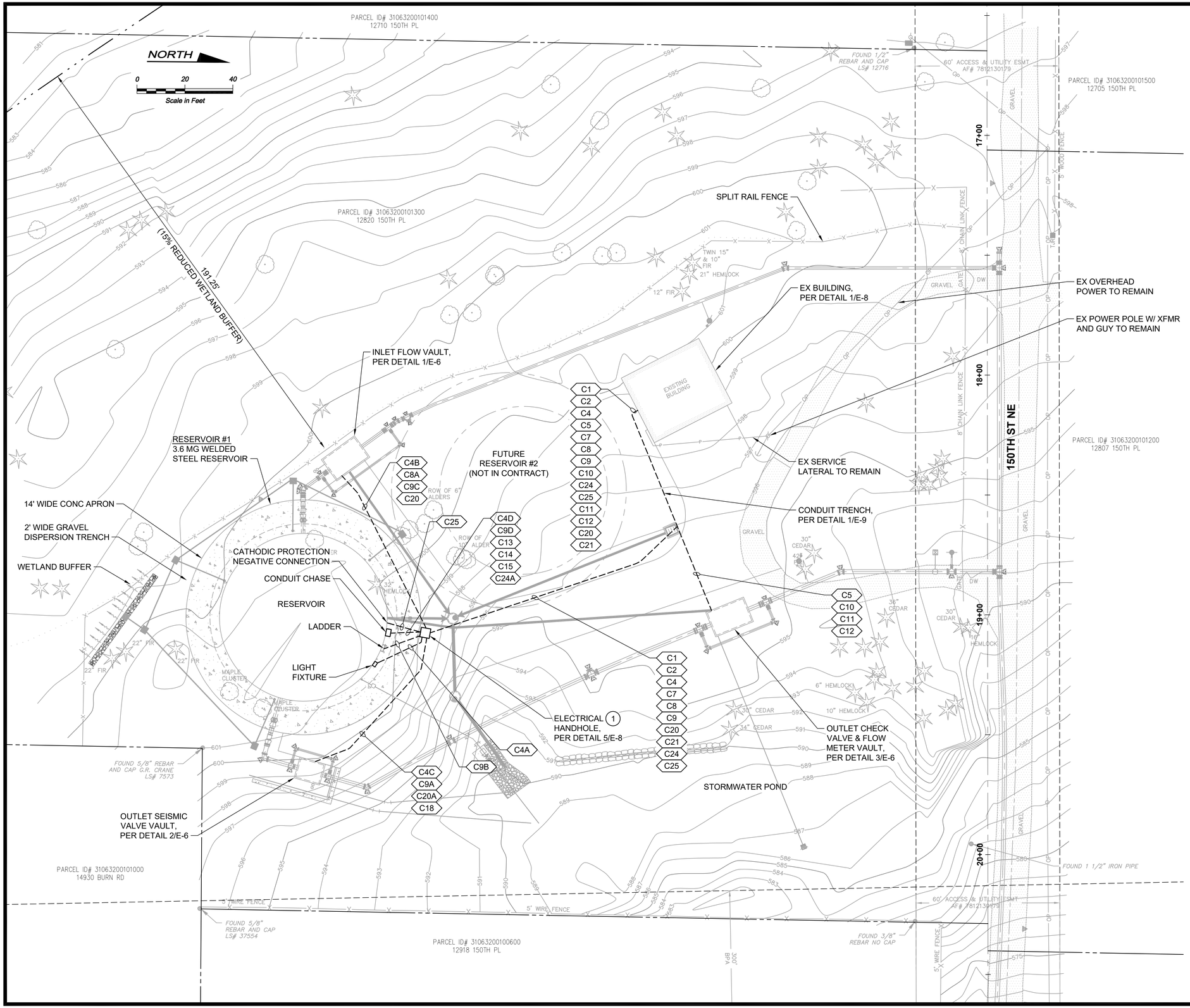

CONSTRUCTION NOTES:

1. DRAIN HANDHOLE TO ADJACENT DRAIN MANHOLE. SEE CIVIL DRAWINGS.

No.	DATE	REVISION	APPR.
	MAY 2025	ISSUED FOR PERMIT	

SNOHOMISH COUNTY PUD
PUBLIC UTILITY DISTRICT NO. 1
3301 OLD HARTFORD ROAD, LAKE STEVENS
WASHINGTON 98258 (425) 397-3000
MAILING ADDRESS: P.O. BOX 1107,
EVERETT, WASHINGTON 98206

BURN ROAD RESERVOIR
ELECTRICAL SITE PLAN

JEFFREY S. GIBSON
STATE OF WASHINGTON
33080
REGISTERED PROFESSIONAL ENGINEER
05/21/2025

DATE	May 2025
DESIGNED	JSG
DRAWN	JJL
CHECKED	CGT
SCALE	

WO# 100099341

WE–	965
DWG #	E-2
SHEET	30
OF	37

Call 48 Hours Before You Dig
1-800-424-5555
UNDERGROUND SERVICE

Path: S:\Cad\Snohomish PUD\23-10882 Burn Rd Resv\d Filename: P23-10882_E-2 Plot date: May 21, 2025-05:22:30pm CAD User: abradley.
Xref Filename: | X23-10882_Ex Topo | X23-10882_Status | X23-10882_TB | X23-10882_Ex Prof | Talich | X23-10882_Ex Prop-RW | X23-10882_Prop Site | X23-10882_Prop Util | X23-10882_Dwg Layout | Gibson | Rogers | Stevens | McCrosky | Wildhood | Gillespie | Dahl |

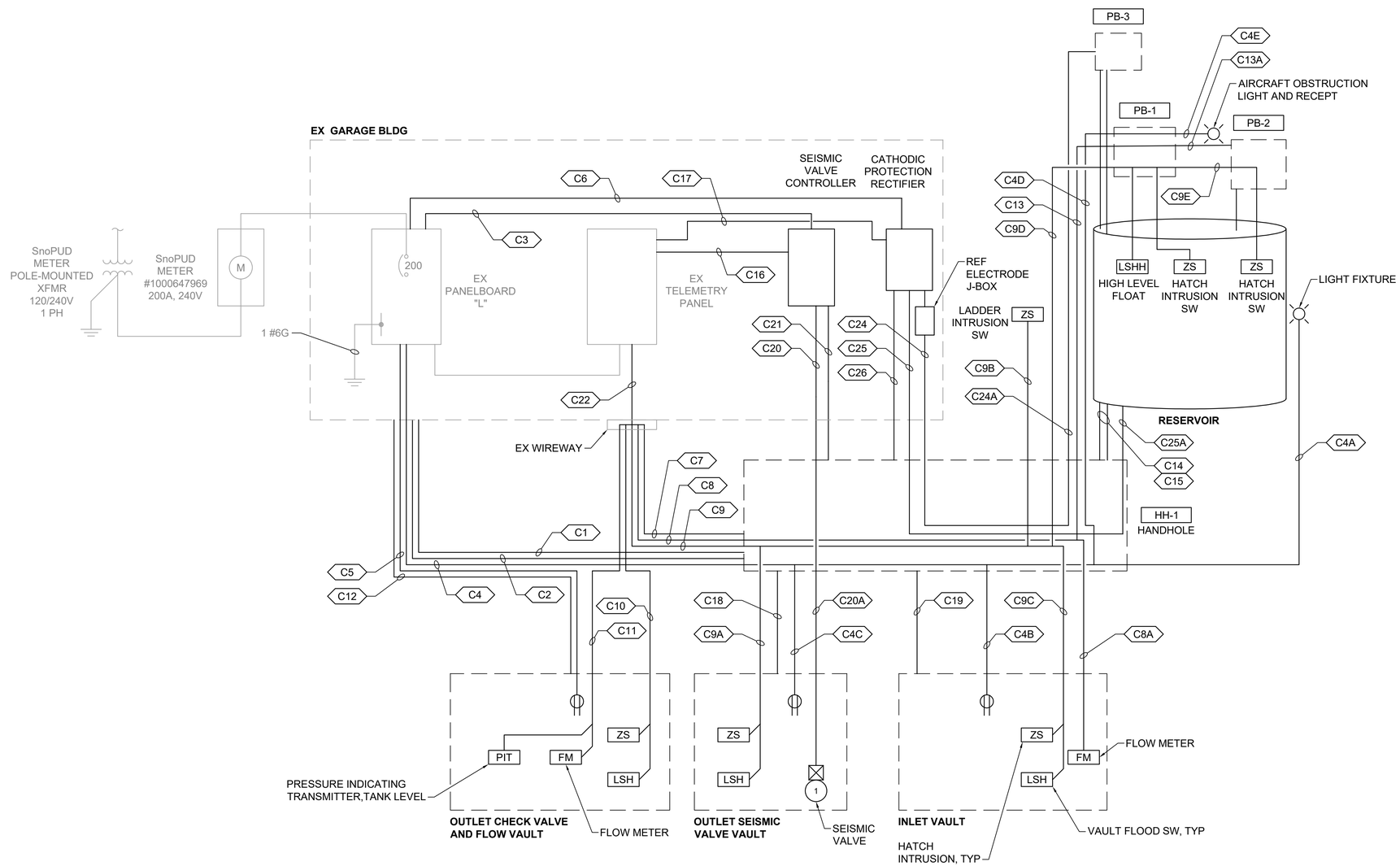

ONE-LINE DIAGRAM

DETAIL 1

NTS -

CONSTRUCTION NOTES:

1. PROVIDE NEW CIRCUIT BREAKER IN EXISTING PANELBOARD. MATCH RATINGS OF PANEL. SEE PANEL SCHEDULE DETAIL ON DWG E-5.

Call 48 Hours Before You Dig

1-800-424-5555

UNDERGROUND SERVICE

No.	DATE	REVISION	APPR.
	MAY 2025	ISSUED FOR PERMIT	

SNOHOMISH COUNTY PUD
PUBLIC UTILITY DISTRICT NO. 1
3301 OLD HARTFORD ROAD, LAKE STEVENS
WASHINGTON 98258 (425) 397-3000
MAILING ADDRESS: P.O. BOX 1107,
EVERETT, WASHINGTON 98206

BURN ROAD RESERVOIR
ELECTRICAL ONE-LINE DIAGRAM

JEFFREY S. GIBSON, STATE OF WASHINGTON, 33080, REGISTERED PROFESSIONAL ENGINEER
05/21/2025

DATE	May 2025
DESIGNED	JSG
DRAWN	JJL
CHECKED	CGT
SCALE	N/A

WO# 100099341

WE–	965
DWG #	E-3
SHEET	31
OF	37

Path: S:\Cad\Snohomish PUD\23-10882 Burn Rd Rsv\d Filename: P23-10882_E-3 Plot date: May 21, 2025-05:23:37pm CAD User: abradley.
Xref Filename: | X23-10882_Status | X23-10882_TB | Talich | Gibson | Rogers | Stevens | McCrosky | Wildhood | Gillespie | Dahl |

EX PANELBOARD "L" SCHEDULE

	POLE NO.	C.B. AMP	C.B. POLES	SERVICE	LOAD KVA TOTAL	TYPE	A	B		TYPE	TOTAL	SERVICE	C.B. AMP	C.B. POLES	POLE NO.	
	1	30	2	HEAT	1.5	N	1.5					GENERATOR	30	2	2	
	3							1.5							4	
	5	20	1	PLC CONTROL	0.5	C	0.86			R	0.36	WEST OUTLETS	20	1	6	
	7	20	1	OUTSIDE OUTLET	0.18	R		0.54		R	0.36	SOUTH OUTLETS	20	1	8	
	9	20	1	LIGHTS	0.9	L	1.26			R	0.36	NORTH OUTLETS	20	1	10	
1	11	20	1	SEISMIC VALVE CONTROLLER	0.8	M		0.8				SPARE	20	1	12	
1	13	20	1	RESERVOIR LIGHT	0.1	L	1.6			C	1.5	CATHODIC PROTECTION RECTIFIER	20	1	14	1
1	15	20	1	AIRCRAFT OB. LT/RECEPT	0.2	R		0.2				FUTURE TANK MIXER	20	1	16	1
1	17	20	1	VAULT RECEPTS	0.54	R	0.54								18	
				CONNECTED LOAD PER PHASE			5.76	3.04								

LOAD SUMMARY

	CONN KVA	DEMAND FACTOR	DEMAND KVA
TYPE "L": LIGHTING LOADS	1.00	125%	1.25
TYPE "C": CONTINUOUS LOADS	2.00	125%	2.50
TYPE "R": RECEPTACLES (FIRST 10KVA)	2.00	100%	2.00
TYPE "R": RECEPTACLES (OVER 10KVA)		50%	
TYPE "M": LARGEST MOTOR LOAD	0.80	125%	1.00
TYPE "M": OTHER MOTOR LOADS		100%	
TYPE "N": NON-CONTINUOUS LOADS	3.00	100%	3.00
TYPE "K" KITCHEN LOADS			
TYPE "S": SUB-FEED (INCLUDED IN LOADS ABOVE)			
TOTAL	8.80		9.75

VOLTS: 120/240V, 1PH, 3W
MAIN C.B.: 200 A
BUS: 200 A
POLES: 20
MOUNTING: SURFACE
AIC RATING 10,000

DEMAND AMPS
41

PANEL FEATURES

BRKR FEATURES

LUMINAIRE SCHEDULE

TAG	DESCRIPTION	MANUF/MODEL	VOLTAGE	LUMENS/CD	NOTES
A	EXTERIOR WALL PACK, LED 4000 K COLOR TEMP, PE CELL DARK BRONZE, ADJUSTABLE OUTPUT	LITHONIA # TWX2 LED ALO 40K MVOLT PE DDBXD	120	1450-6850	SET LUMENS TO 5250
B	AIRCRAFT OBSTRUCTION LIGHT, DUAL LED FIXTURES ON COMMON MOUNT, RED, SOLID ON, NIGHT VISION GOGGLE & NVIS COMPATIBLE, IP67 RATED, PHOTOCELL, ETL CERTIFIED L-810, FAA AC 150/5345-43J	FLIGHT LIGHT #FL-810LNV-R-AC-D-PM-P	120	32.5 CD	PROVIDE PHOTOCELL MOUNTING J-BOX AS REQURED

CONSTRUCTION NOTES:

1. PROVIDE 20A, 1-POLE CIRCUIT BREAKER IN EXISTING PANELBOARD. PANEL IS EATON TYPE BR LOAD CENTER. BREAKERS SHALL BE EATON BR120, 10KAIC

CONDUIT SCHEDULE

PT #	CONDUIT SIZE	CONDUIT TYPE	WIRE/CABLE	FROM	TO	NOTES
C1	2"	PVC		EX GARAGE BUILDING	HH-1	SPARE
C2	2"	PVC		EX GARAGE BUILDING	HH-1	SPARE
C3	3/4"	RGS	2#12 & #12G	EX PANELBOARD	SEISMIC VALVE CONTROLLER	
C4	2"	PVC/RGS	4#10, 6#12 & #10G	EX PANELBOARD	HH-1	LIGHTS/RECEPT
C4A	1"	PVC/RGS	2#12 & #12 G	HH-1	EXTERIOR LIGHT A	ON TANK WALL
C4B	1"	PVC/RGS	2#12 & #12 G	HH-1	INLET VAULT	RECEPT
C4C	1"	PVC/RGS	2#12 & #12 G	HH-1	OUTLET SEISMIC VAULT	RECEPT
C4D	2"	PVC/RGS	4#10 & #10G	HH-1	PB-1	2 SPARE FOR FUTURE MIXER
C4E	3/4"	RGS	2#12 & #12 G	PB-1	AIRCRAFT OBS. LIGHT	LIGHT/RECEPT
C5	1"	PVC	2#12 & #12 G	EX PANELBOARD	OUTLET CHECK/FLOW VAULT	RECEPT
C6	3/4"	RGS	2#12 & #12 G	EX PANELBOARD	CATHODIC PROTECTION RECTIFIER	
C7	2"	PVC		EX TELEMETRY PANEL	HH-1	SPARE
C8	2"	PVC	1TSQ#16	EX TELEMETRY PANEL	HH-1	ANALOG CIRCUITS
C8A	1"	PVC	1TSQ#16	HH-1	INLET VAULT	INLET FLOW
C9	2"	PVC	18#14	EX TELEMETRY PANEL	HH-1	DIGITAL CIRCUITS
C9A	1"	PVC	4#14	HH-1	OUTLET SEISMIC VAULT	HATCH INTRUSION/VAULT FLOOD
C9B	3/4"	PVC/RGS	4#14	HH-1	LADDER INTRUSION SW	LADDER INTRUSION
C9C	1"	PVC/RGS	4#14	HH-1	INLET VAULT	HATCH INTRUSION/VAULT FLOOD
C9D	2"	PVC/RGS	6#14	HH-1	PB-1	HATCH INTRUSION/OVERFLOW
C9E	1"	RGS	2#14	PB-1	PB-2	
C10	1"	PVC	4#14	EX TELEMETRY PANEL	OUTLET CHECK/FLOW VAULT	HATCH INTRUSION/VAULT FLOOD
C11	1"	PVC	2TSQ#16	EX TELEMETRY PANEL	OUTLET CHECK/FLOW VAULT	OUTLET FLOW/TANK LEVEL
C12	1"	PVC		EX GARAGE BUILDING	OUTLET CHECK/FLOW VAULT	SPARE
C13	2"	PVC/RGS		HH-1	PB-1	SPARE
C13A	1"	RGS		PB-1	PB-2	SPARE
C14	2"	PVC/RGS		HH-1	TANK CONDUIT CHASE	SPARE
C15	2"	PVC/RGS		HH-1	TANK CONDUIT CHASE	SPARE
C16	3/4"	RGS	8#14	EX TELEMETRY PANEL	SEISMIC VALVE CONTROLLER	
C17	3/4"	RGS	4#14	EX TELEMETRY PANEL	CATHODIC PROTECTION RECTIFIER	
C18	1"	PVC		HH-1	OUTLET SEISMIC VAULT	SPARE
C19	1"	PVC		HH-1	INLET VAULT	SPARE
C20	2"	PVC	4#10 & #10G	SEISMIC VALVE CONTROLLER	HH-1	
C20A	1"	PVC	4#10 & #10G	HH-1	SEISMIC VALVE	
C21	2"	PVC		SEISMIC VALVE CONTROLLER	HH-1	SPARE
C22	3"	RGS	20#14 & 3TSQ#16	EX WIREWAY	EX TELEMETRY PANEL	
C23						NOT USED
C24	2"	PVC	BY DIV 13	CATHODIC PROT. RECTIFIER	HH-1	
C24A	2"	PVC/RGS	BY DIV 13	HH-1	PB-3	
C25	2"	PVC	BY DIV 13	CATHODIC PROT. RECTIFIER	HH-1	
C25A	2"	PVC/RGS	BY DIV 13	HH-1	RESERVOIR NEGATIVE CONNECTION	
C26	2"	PVC		CATHODIC PROT. RECTIFIER	HH-1	SPARE

NOTES:

1. PROVIDE A SPARE JET LINE IN ALL CONDUITS FOR FUTURE.

Call 48 Hours Before You Dig
1-800-424-5555
UNDERGROUND SERVICE

No.	DATE	REVISION	APPR.
	MAY 2025	ISSUED FOR PERMIT	

SNOHOMISH COUNTY PUD PUBLIC UTILITY DISTRICT NO. 1
3301 OLD HARTFORD ROAD, LAKE STEVENS
WASHINGTON 98258 (425) 397-3000
MAILING ADDRESS: P.O. BOX 1107, EVERETT, WASHINGTON 98206

BURN ROAD RESERVOIR ELECTRICAL SCHEDULE

JEFFREY S. GIBSON, STATE OF WASHINGTON, 33080, REGISTERED PROFESSIONAL ENGINEER
05/21/2025

DATE	May 2025
DESIGNED	JSG
DRAWN	JJL
CHECKED	CGT
SCALE	

WO# 100099341

WE–	965
DWG #	E-4
SHEET	32
OF	37

Path: S:\Cad\Snohomish PUD\23-10882 Burn Rd Resv\d Filename: P23-10882_E-4 Plot date: May 21, 2025-05:30:10pm CAD User: abradley.
Xref Filename: | X23-10882_TB | X23-10882_Status | Talich | Rogers | Stevens | Gibson | McCrosky | Wildhood | Gillespie | Dahl |

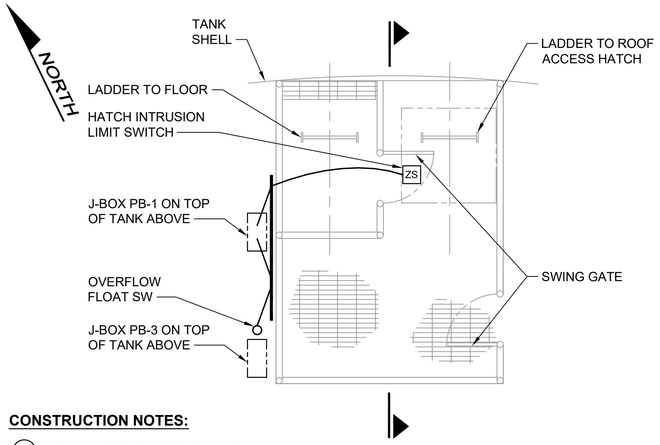

CONSTRUCTION NOTES:

1. NOT ALL CONDUITS SHOWN. SEE DETAILS 2/E-8 AND 4/E-8.
2. OVERFLOW FLOAT. APPROVED FOR WATER DISTRIBUTION. WIRED N.C. FOR PLC NOTIFICATION OPENS THE CIRCUIT UPON HIGH WATER LEVEL.

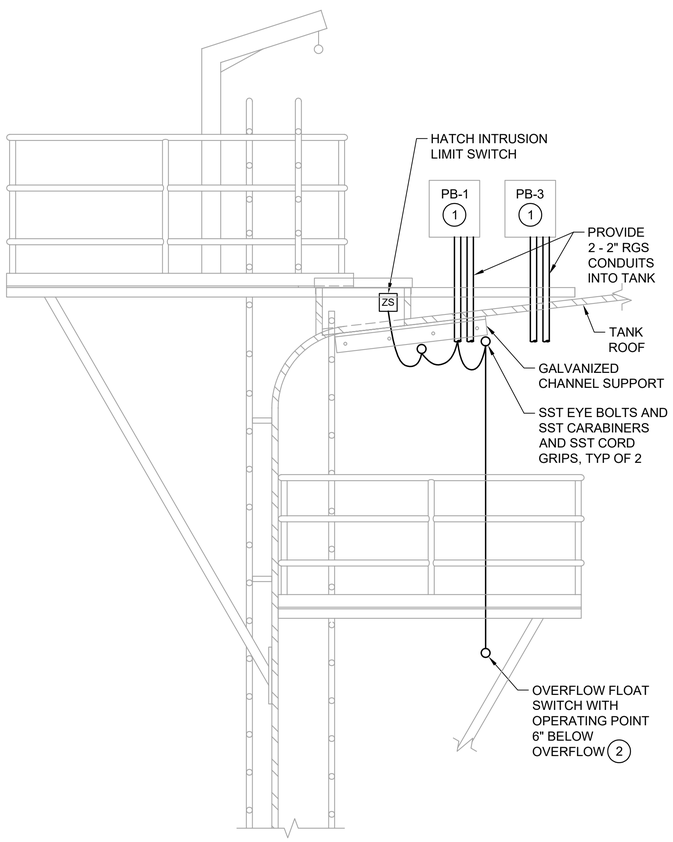

SECTION

INSIDE PLATFORM

DETAIL 1

NTS

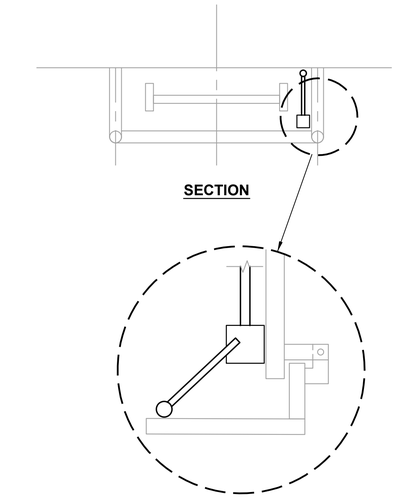

SECTION

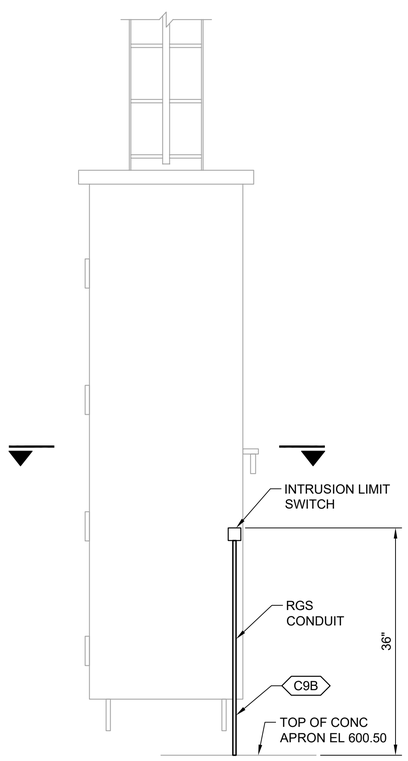

LADDER GUARD INTRUSION SWITCH

DETAIL 2

NTS E-7

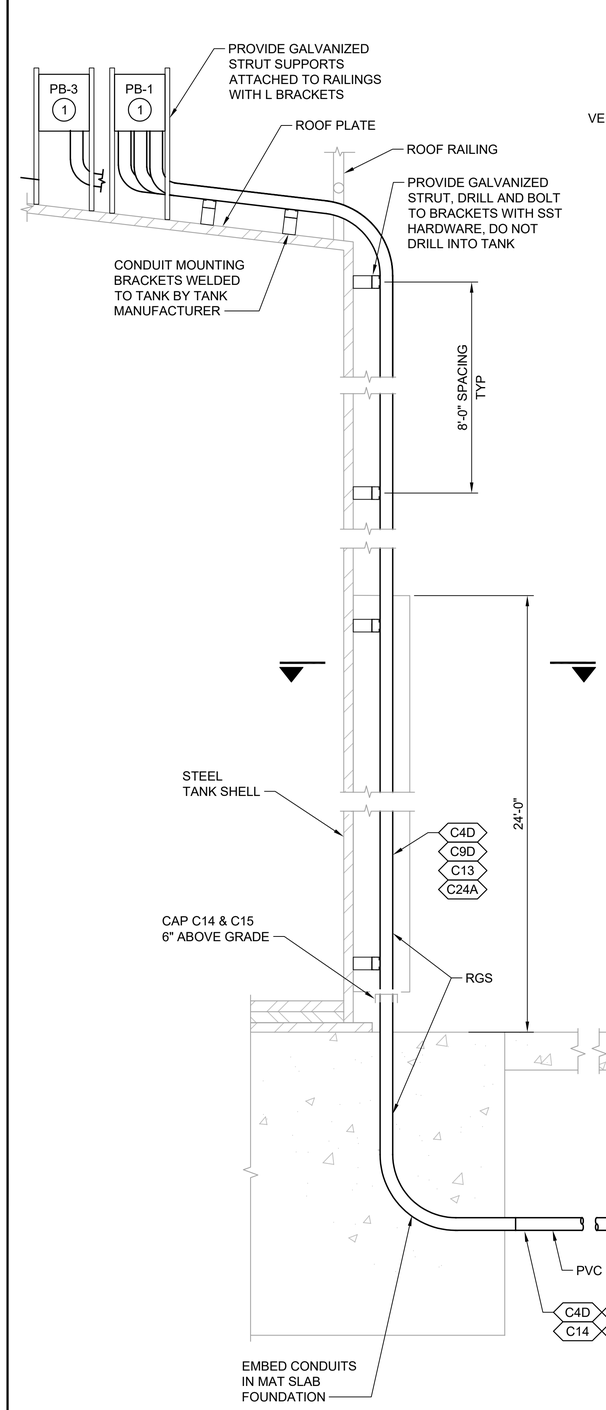

CONDUIT CHASE

DETAIL 3

NTS E-7

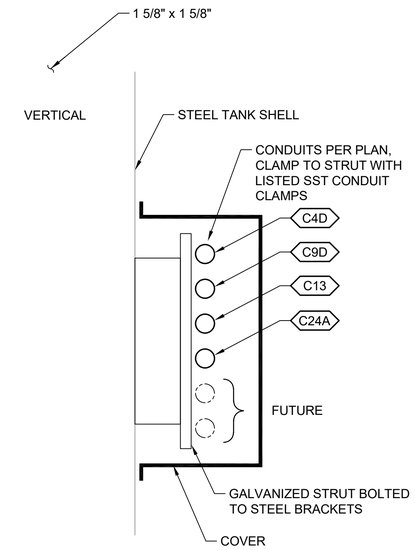

SECTION

NOTE:

1. SEE STRUCTURAL DRAWINGS FOR CONDUIT SHROUD AND STRUT/ TANK ATTACHMENT DETAILS.

1. NOT ALL CONDUITS SHOWN. SEE DETAILS 2/E-8 AND 4/E-8.
2. OVERFLOW FLOAT. APPROVED FOR WATER DISTRIBUTION. WIRED N.C. FOR PLC NOTIFICATION OPENS THE CIRCUIT UPON HIGH WATER LEVEL.

Call 48 Hours Before You Dig

1-800-424-5555

UNDERGROUND SERVICE

No.	DATE	REVISION	APPR.
	MAY 2025	ISSUED FOR PERMIT	

SNOHOMISH COUNTY PUD
PUBLIC UTILITY DISTRICT NO. 1
3301 OLD HARTFORD ROAD, LAKE STEVENS WASHINGTON 98258 (425) 397-3000
MAILING ADDRESS: P.O. BOX 1107, EVERETT, WASHINGTON 98206

BURN ROAD RESERVOIR
ELECTRICAL DETAILS
1 OF 2

JEFFREY S. GIBSON
STATE OF WASHINGTON
33080
REGISTERED PROFESSIONAL ENGINEER
05/21/2025

DATE	May 2025
DESIGNED	MTM
DRAWN	EDM
CHECKED	CGT
SCALE	AS SHOWN

WO# 100099341

WE–	965
DWG #	E-5
SHEET	33
OF	37

Path: S:\Cad\Snohomish PUD\23-10882 Burn Rd Resv\d Filename: P23-10882_E-5 Plot date: May 21, 2025-05:26:22pm CAD User: abradley.
Xref Filename: | X23-10882_TB | X23-10882_Status | Talich | Rogers | Stevens | Gibson | McCrosky | Wildhood | Gillespie | Dalil |

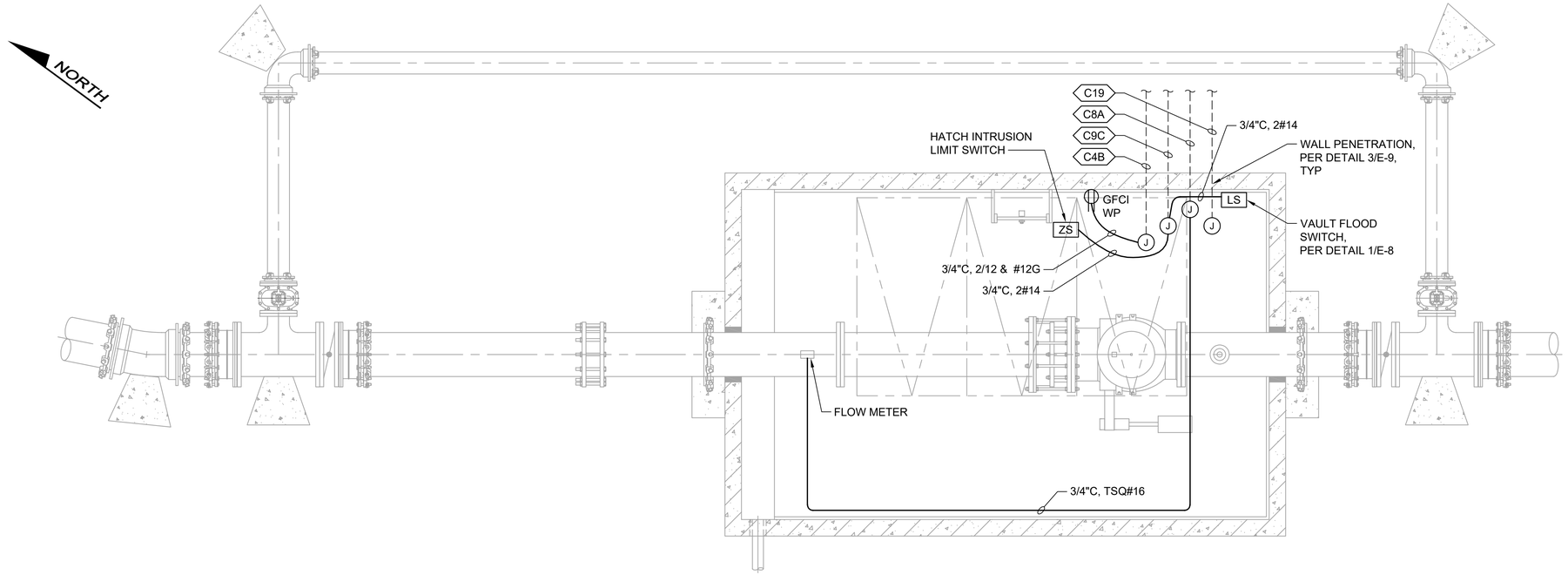

INLET VAULT ELECTRICAL

PLAN 1

SCALE: 1/2" = 1'-0" E-2

NOTES:

1. JUNCTION BOXES INSIDE VAULTS SHALL BE NEMA 4X, MINIMUM SIZE 6" x 6" x 4".

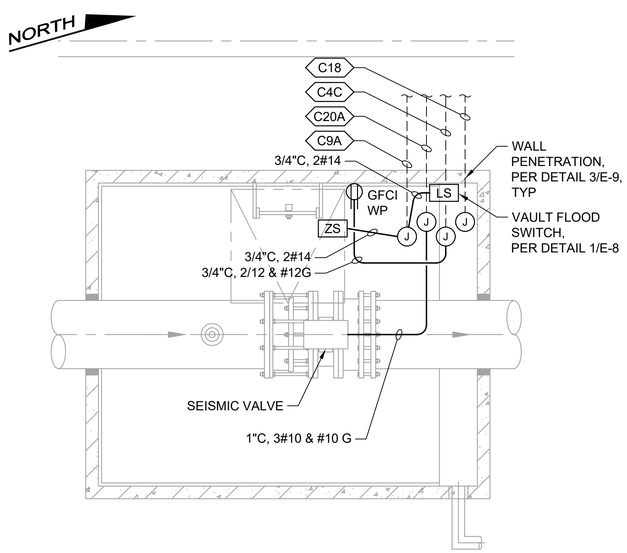

OUTLET SEISMIC VALVE VAULT ELECTRICAL

PLAN 2

SCALE: 1/2" = 1'-0"

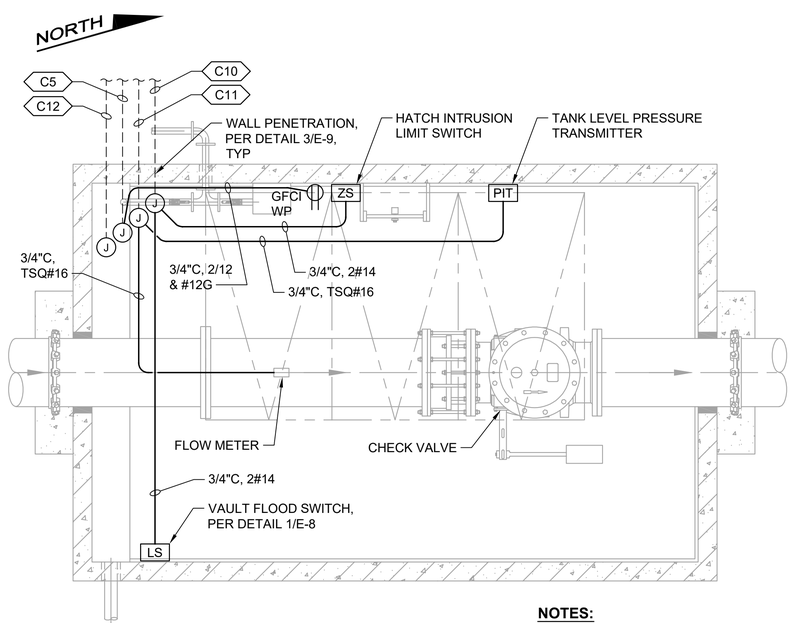

NOTES:

1. JUNCTION BOXES INSIDE VAULTS SHALL BE NEMA 4X, MINIMUM SIZE 6" x 6" x 4".

OUTLET CHECK VALVE AND FLOW ELECTRICAL

PLAN 3

SCALE: 1/2" = 1'-0"

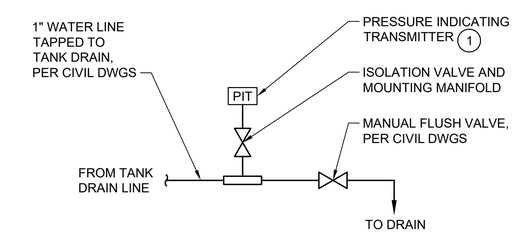

CONSTRUCTION NOTES:

1. MEASURE ELEVATION OF TRANSDUCER RELATIVE TO TANK BOTTOM (EL 600.5). CALIBRATE TRANSDUCER ZERO OFFSET TO READ 0.00 WHEN WATER LEVEL IS AT BOTTOM OF TANK.

TANK LEVEL MONITORING SCHEMATIC DIAGRAM

DETAIL 4

N/A

No.	DATE	REVISION	APPR.
	MAY 2025	ISSUED FOR PERMIT	

SNOHOMISH COUNTY PUD
PUBLIC UTILITY DISTRICT NO. 1
3301 OLD HARTFORD ROAD, LAKE STEVENS WASHINGTON 98258 (425) 397-3000
MAILING ADDRESS: P.O. BOX 1107, EVERETT, WASHINGTON 98206

BURN ROAD RESERVOIR
ELECTRICAL DETAILS 2 OF 2

JEFFREY S. GIBSON, STATE OF WASHINGTON, 13080, REGISTERED PROFESSIONAL ENGINEER
05/21/2025

DATE	May 2025
DESIGNED	MTM
DRAWN	EDM
CHECKED	CGT
SCALE	AS SHOWN

WO# 100099341

WE–	965
DWG #	E-6
SHEET	34
OF	37

Call 48 Hours Before You Dig
1-800-424-5555
UNDERGROUND SERVICE

Path: S:\Cad\Snohomish PUD\23-10882 Burn Rd Res\d Filename: P23-10882_E-6 Plot date: May 21, 2025-05:26:59pm CAD User: abradley:
Xref Filename: | X23-10882_TB | Tailch | X23-10882_Status | Stevens | X23-10882_Prop Vaults | Gibson | Rogers | McCrosky | Wildhood | Gillespie | Dahl |

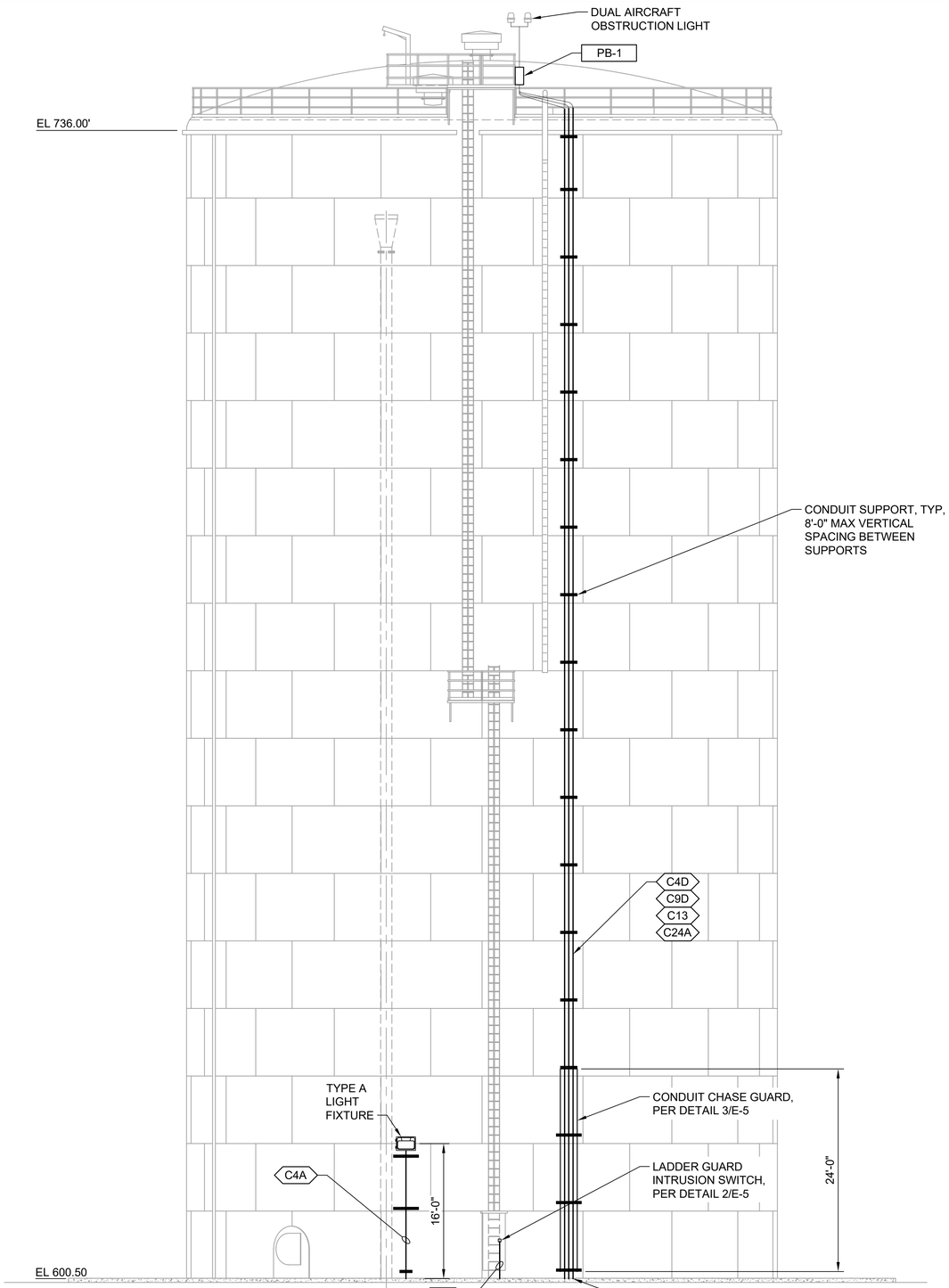

ELEVATION A

SCALE: 1/8" = 1'-0"

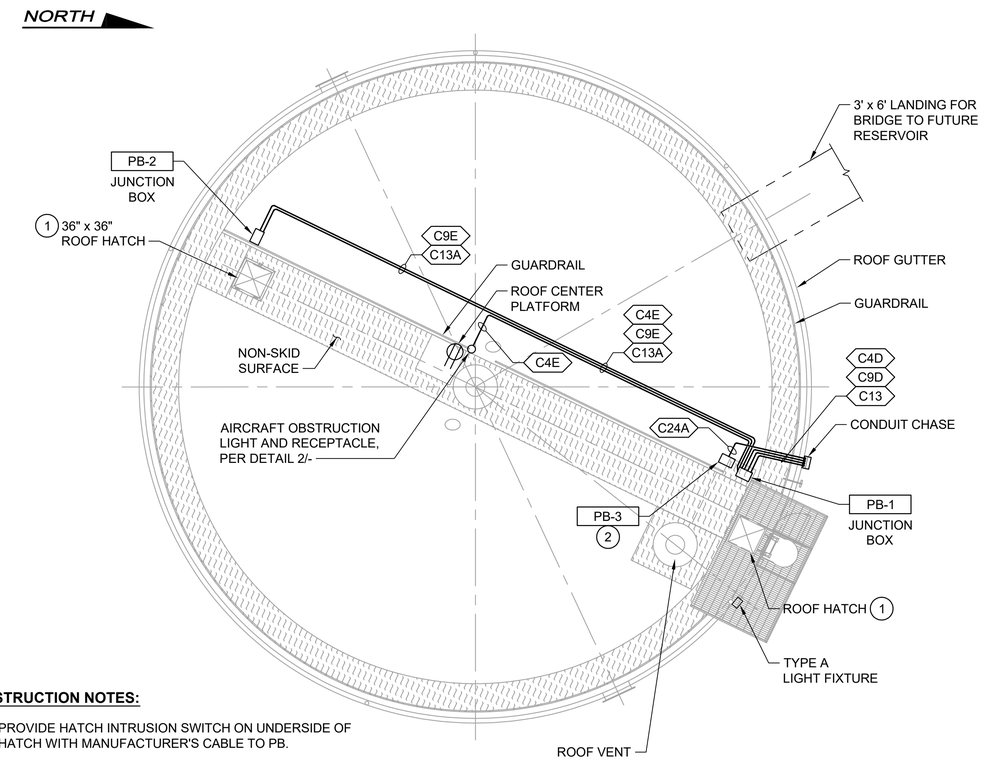

CONSTRUCTION NOTES:

1. PROVIDE HATCH INTRUSION SWITCH ON UNDERSIDE OF HATCH WITH MANUFACTURER'S CABLE TO PB.
2. CONDUIT AND J-BOX FOR CATHODIC PROTECTION BY DIV 16. ALL DC CONDUCTORS, LEADS, ANODES, REFERENCE ELECTRODES, SUPPORT SYSTEMS, AND ACCESS HANDHOLES FOR CATHODIC PROTECTION BY DIV. 13.

RESERVOIR ELECTRICAL ROOF PLAN 1

SCALE: 1/8" = 1'-0"

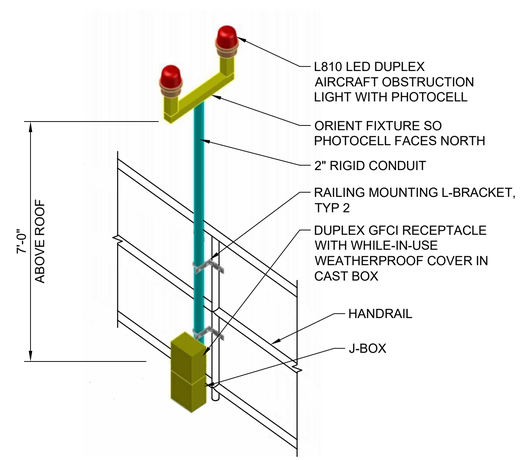

AIRCRAFT OBSTRUCTION LIGHT DETAIL 2

NTS

Call 48 Hours Before You Dig

1-800-424-5555

UNDERGROUND SERVICE

No.	DATE	REVISION	APPR.
	MAY 2025	ISSUED FOR PERMIT	

SNOHOMISH COUNTY PUD PUBLIC UTILITY DISTRICT NO. 1
3301 OLD HARTFORD ROAD, LAKE STEVENS WASHINGTON 98258 (425) 397-3000
MAILING ADDRESS: P.O. BOX 1107, EVERETT, WASHINGTON 98206

BURN ROAD RESERVOIR RESERVOIR ELECTRICAL ELEVATION AND ROOF PLAN

JEFFREY S. GIBSON STATE OF WASHINGTON 33080 REGISTERED PROFESSIONAL ENGINEER
05/21/2025

DATE	May 2025
DESIGNED	MTM
DRAWN	EDM
CHECKED	CGT
SCALE	AS SHOWN

WO# 100099341

WE–	965
DWG #	E-7
SHEET	35
OF	37

Path: S:\Cad\Snohomish PUD\23-10882 Burn Rd Resv\d Filename: P23-10882_E-7 Plot date: May 21, 2025-05:27:31pm CAD User: abradley.
Xref Filename: | X23-10882_TB | Tallch | Rogers | X23-10882_Status | Stevens | X23-10882_Prop Rsvr | Gibson | McCrosky | Wildhood | Gillespie | Dahl |

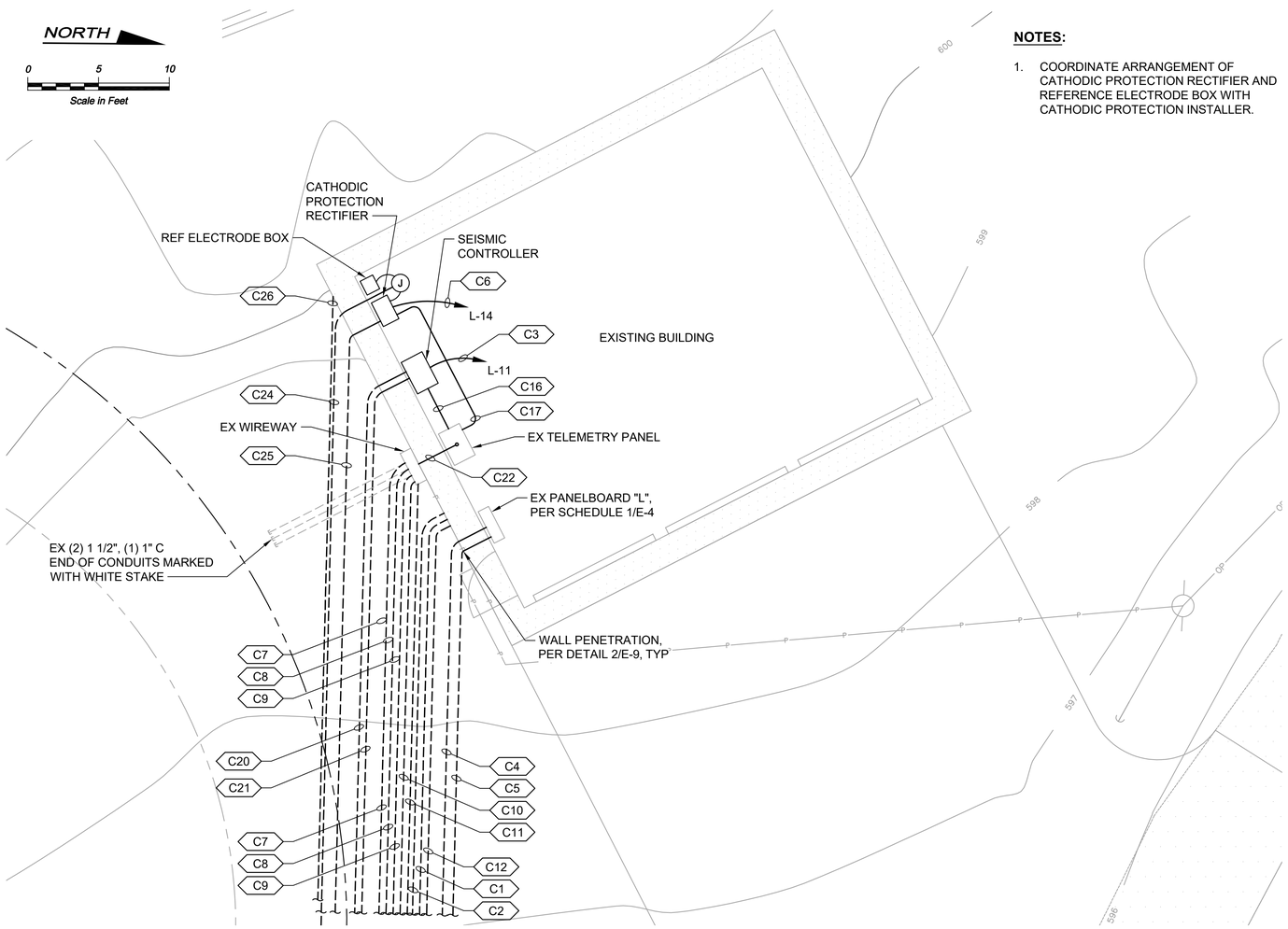

GARAGE BUILDING

PLAN 1

SCALE: 1" = 5'-0"

NOTES:

1. COORDINATE ARRANGEMENT OF CATHODIC PROTECTION RECTIFIER AND REFERENCE ELECTRODE BOX WITH CATHODIC PROTECTION INSTALLER.

NOTES:

1. SEE CIVIL DRAWINGS FOR DRAIN PIPE INFORMATION.
2. HANDHOLE SHALL BE OLDCASTLE 444-LA OR APPROVED EQUAL. BASE, LID AND HATCH SHALL BE RATED FOR LIVE LOADS PER AASHTO HS20-44 32,000 LBS. REAR AXLE LOADING.

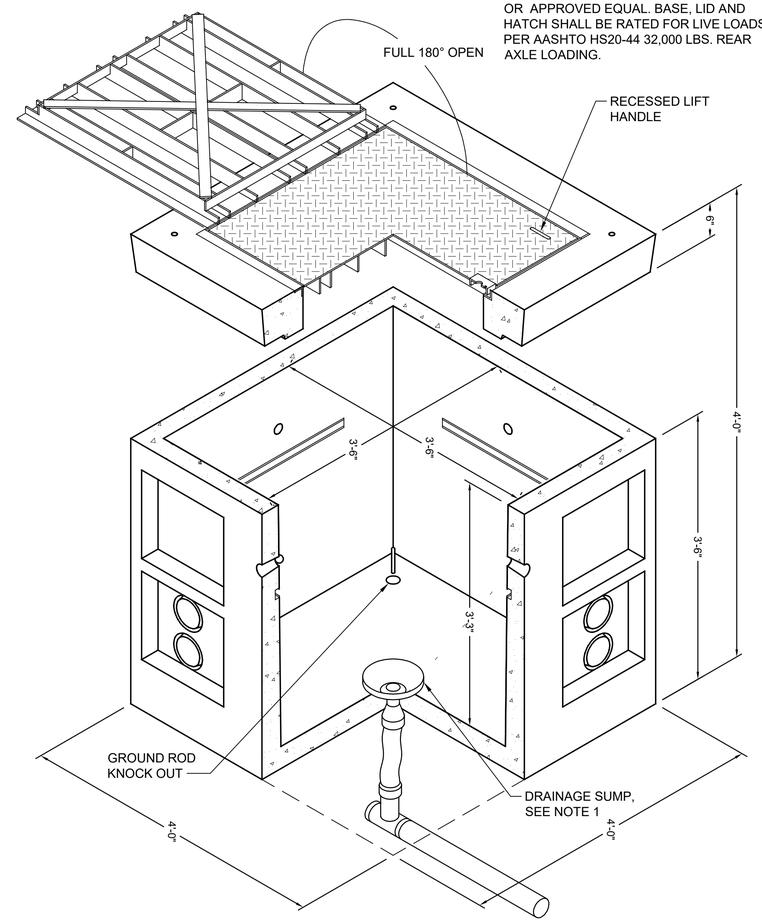

HANDHOLE

DETAIL 5

NTS

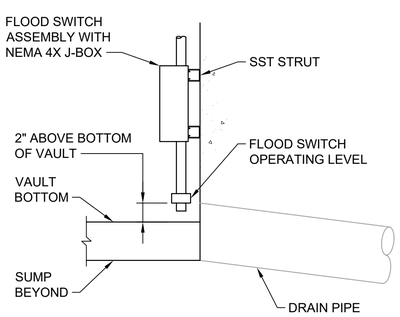

NOTES:

1. MOUNT FLOOD SWITCH ADJACENT TO, BUT NOT BLOCKING, DRAIN.

VAULT FLOOD SWITCH

DETAIL 1

NTS

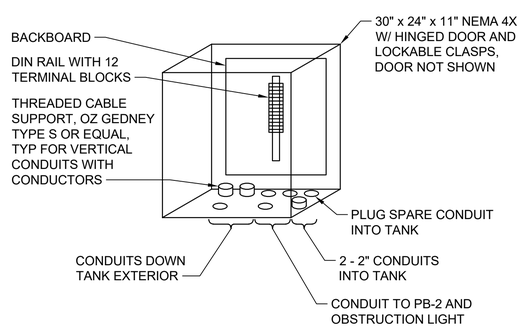

PB-1

DETAIL 2

NTS

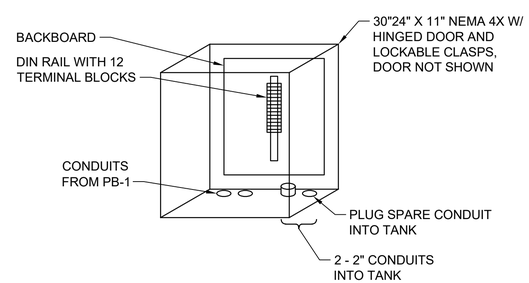

PB-2

DETAIL 3

NTS

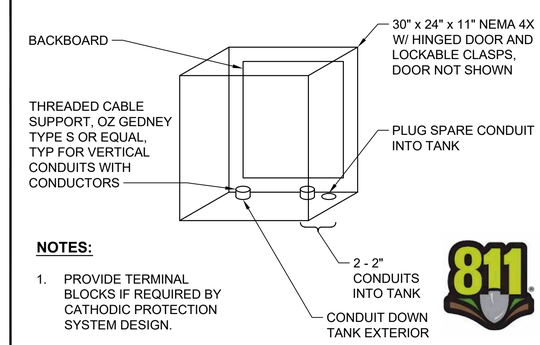

NOTES:

1. PROVIDE TERMINAL BLOCKS IF REQUIRED BY CATHODIC PROTECTION SYSTEM DESIGN.

PB-3

DETAIL 4

NTS

Call 48 Hours Before You Dig

1-800-424-5555

UNDERGROUND SERVICE

No.	DATE	REVISION	APPR.
	MAY 2025	ISSUED FOR PERMIT	

SNOHOMISH COUNTY PUD
PUBLIC UTILITY DISTRICT NO. 1
3301 OLD HARTFORD ROAD, LAKE STEVENS
WASHINGTON 98258 (425) 397-3000
MAILING ADDRESS: P.O. BOX 1107,
EVERETT, WASHINGTON 98206

BURN ROAD RESERVOIR
GARAGE BUILDING PLAN AND ELECTRICAL DETAILS

JEFFREY S. GIBSON, STATE OF WASHINGTON, 33080, REGISTERED PROFESSIONAL ENGINEER

05/21/2025

DATE	May 2025
DESIGNED	JSG
DRAWN	JJL
CHECKED	CGT
SCALE	

WO# 100099341

WE–	965
DWG #	E-8
SHEET	36
OF	37

Path: S:\Cad\Snohomish PUD\23-10882 Burn Rd Resv\d Filename: P23-10882_E-8 Plot date: May 21, 2025-05:28:06pm CAD User: abradley.
Xref Filename: | X23-10882_Ex Topo | X23-10882_Status | X23-10882_TB | X23-10882_Ex Prof | Talich | X23-10882_Ex Prop-RW | X23-10882_Prop Site | X23-10882_Prop Util | X23-10882_Dwg Layout | Gibson | Rogers | Stevens | McCrosky | Wildhood | Gillespie | Dahl |

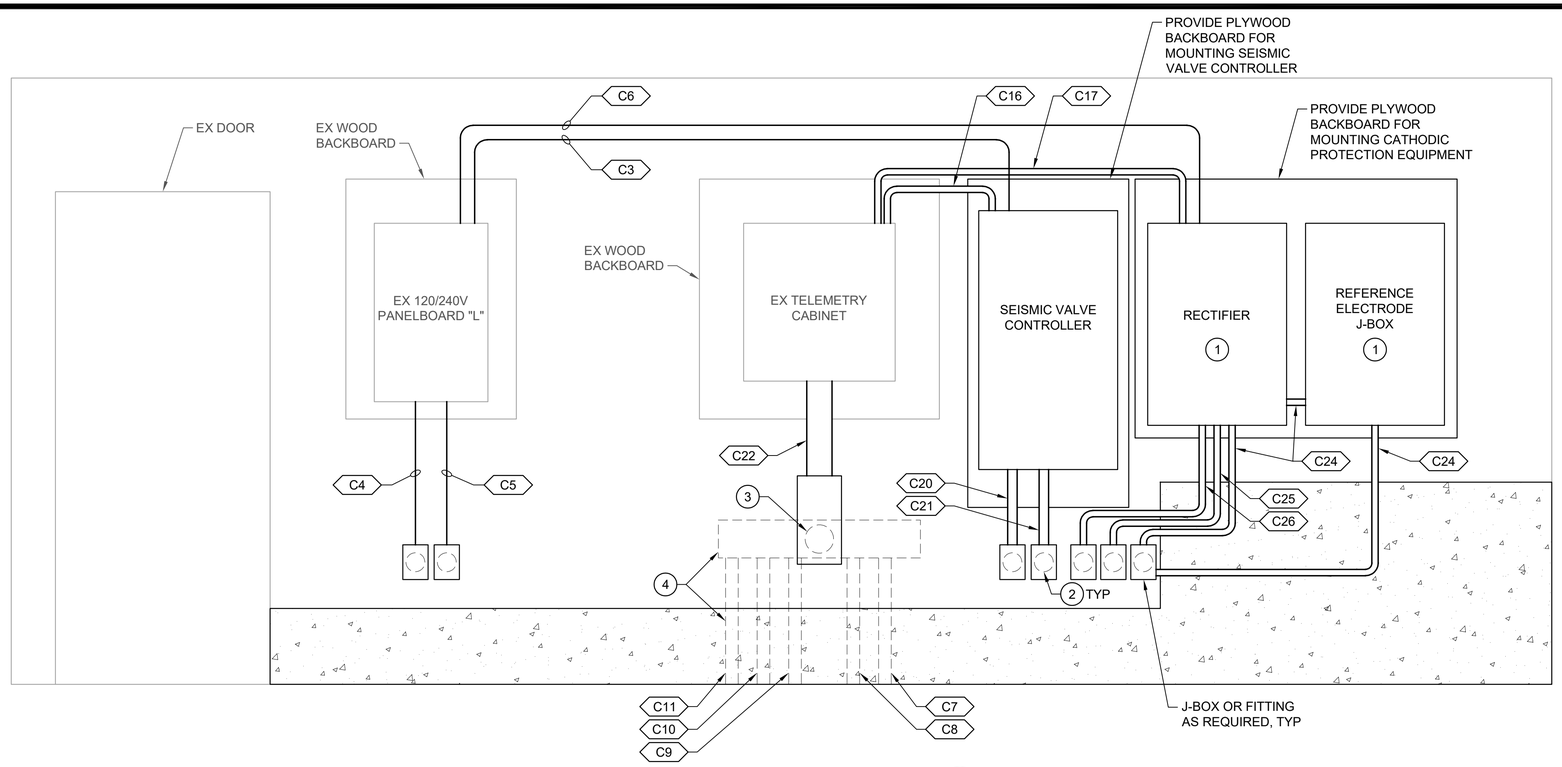

ELEVATION A

SCALE: 1" = 1'-0"

NOTES:

1. EXISTING CONDUITS NOT SHOWN.

CONSTRUCTION NOTES:

1. CATHODIC PROTECTION EQUIPMENT CABINET(S) AS DESIGNED BY CATHODIC PROTECTION ENGINEER. ACTUAL EQUIPMENT SIZES AND ARRANGEMENT MAY VARY.
2. DRILL CONDUIT PENETRATIONS T THROUGH EXISTING WALL. CAULK AROUND CONDUITS WITH POLYURETHANE CONSTRUCTION SEALANT.
3. CONTRACTOR MAY UTILIZE EXISTING WALL PENETRATION OR REPLACE WITH NEW.
4. WIREWAY AND CONDUITS ON BUILDING EXTERIOR WALL.

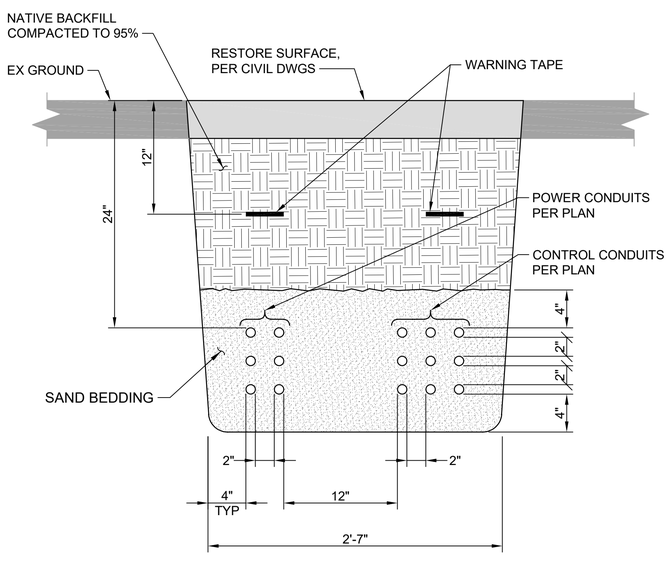

CONDUIT TRENCH DETAIL 1

SCALE: 1 1/2" = 1'-0" TYP

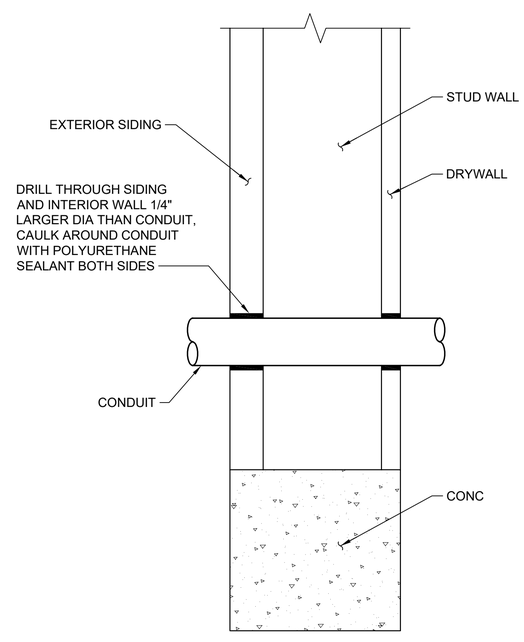

WALL PENETRATION - WOOD WALL DETAIL 2

NTS -

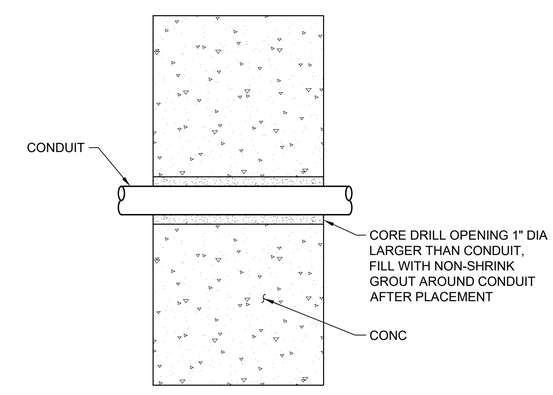

WALL PENETRATION - CONCRETE VAULT WALL DETAIL 3

NTS -

Call 48 Hours Before You Dig

1-800-424-5555

UNDERGROUND SERVICE

No.	DATE	REVISION	APPR.
	MAY 2025	ISSUED FOR PERMIT	

SNOHOMISH COUNTY PUD
PUBLIC UTILITY DISTRICT NO. 1
3301 OLD HARTFORD ROAD, LAKE STEVENS
WASHINGTON 98258 (425) 397-3000
MAILING ADDRESS: P.O. BOX 1107,
EVERETT, WASHINGTON 98206

BURN ROAD RESERVOIR ELECTRICAL DETAILS

JEFFREY S. GIBSON, STATE OF WASHINGTON, 33080, REGISTERED PROFESSIONAL ENGINEER
05/21/2025

DATE	May 2025
DESIGNED	JSG
DRAWN	AWB
CHECKED	CGT
SCALE	

WO# 100099341

WE–	965
DWG #	E-9
SHEET	37
OF	37

Path: S:\Cad\Snohomish PUD\23-10882 Burn Rd Res\d Filename: P23-10882_E-9 Plot date: May 21, 2025-05:28:53pm CAD User: abradley.
Xref Filename: | X23-10882_TB | Tailoh | Gibson | X23-10882_Status | Rogers | Stevens | McCrosky | Wildhood | Gillespie | Dahl |